Oleodinamica/Pneumatica
Hydraulic/Pneumatic



T.638565797 | Teléfono fijo: 961873905
Localización: Polígono La Garrofera, Camino, Camí del Mas de Moret, 25, 46970 Alacuás, Valencia
https://orpemi.com/

ORPEMI S.L.U
SUMINISTROS INDUSTRIALES



Malgrado le informazioni contenute in questo catalogo siano state ritenute accurate ed affidabili e siano state fornite in buona fede, non facciamo garanzie riguardo alla completezza e accuratezza delle informazioni. Il contenuto di questo catalogo è fornito a condizione che il lettore, prima di utilizzare il prodotto, faccia esso stesso le sue valutazioni e determinazioni per verificare che tale prodotto sia idoneo allo scopo. Non ci riteniamo responsabili per danni di qualsiasi natura o per qualsiasi altra cosa possa risultare dall'uso o affidamento delle informazioni incluse in questo catalogo o ai prodotti ai quali si riferiscono. Prodotti e servizi qui indicati potrebbero non essere disponibili. E' proibita la riproduzione di tabelle, fotografie e dati, anche parziali e con qualsiasi sistema, anche elettronico. Ci riserviamo il diritto di aggiornare e modificare in qualsiasi momento, senza preavviso preventivo, metodi di produzione, ingredienti e caratteristiche dei materiali descritti in tutte le pagine.
We make no representation or warranties regarding the completeness or accuracy of the information, although reasonable and information on this catalogue, are believed to be accurate and correct and presented in good faith. The content of this catalogue is supplied upon the condition that the reader will make his own evaluation and determination to verify the suitability of the products for his purpose before using it. We won't be responsible for damages of any nature whatsoever resulting from the use of or reliance upon information included in this catalogue or the products to which the information refers. Products and services here indicated may be unavailable. Any reproduction of tables, pictures and data, even limited, by any system, even electronic, is forbidden. We reserve the right to update and modify production methods, ingredients and characteristics of the materials described in all pages at any time, without giving prior notice.

Indice
Index

Gamma prodotti	**4**	***Products range***	***4***
Sezione tecnica	**8**	***Technical overview***	***8***
Sistemi di tenuta per oleodinamica - guarnizioni stelo - guarnizioni pistone - anelli guida - raschiatori	**18**	***Hydraulic sealing systems*** *- rod seals* *- piston seals* *- wear rings* *- wipers*	***18***
Tenute statiche - guarnizioni statiche - o-rings - anelli antiestrusione	**120**	***Static seals*** *- static seals* *- o-rings* *- back-up rings*	***120***
Sistemi di tenuta per pneumatica - guarnizioni stelo - guarnizioni ammortizzo - guarnizioni pistone - anelli guida - raschiatori	**146**	***Pneumatic sealing systems*** *- rod seals* *- cushion seals* *- piston seals* *- wear rings* *- wipers*	***146***





Gamma prodotti
Product range

Profilo *Profile*	Ns Rif. *Our Ref.*	Temperatura *Temperature* C°	Pressione *Pressure* Bar	Velocità *Speed* m/s	Materiale *Material*	TPU	POM	PTFE Bronzo	NBR	TPE	Resina	PTFE Carbo.	PTFE	Sezione *Section*	Pagina *Page*
GUARNIZIONI STELO / *ROD SEALS*															
Condizioni massime non simultanee / *Maximum conditions (not combined)*															
	RSA	-35 +100	< 400	< 0,5	TPU	●								Idraulica *Hydraulic*	28
	RSB	-35 +100	< 400	< 0,5	TPU	●								Idraulica *Hydraulic*	32
	RSB2	-35 +100	< 500	< 0,5	TPU POM	●	○							Idraulica *Hydraulic*	36
	RSC	-35 +100	< 400	< 0,5	TPU	●								Idraulica *Hydraulic*	38
	RSD	-35 +100	< 400	< 0,5	TPU	●								Idraulica *Hydraulic*	42
	TSS	-30 +120	< 600	15	PTFE bronzo/ bronze NBR			●	●					Idraulica *Hydraulic*	46
	RSO	-35 +100	< 400	< 0,5	TPU NBR	●			●					Idraulica *Hydraulic*	48
	RBR	-35 +100	< 400	< 0,8	TPU POM	●	○							Idraulica *Hydraulic*	50
	RPS	-35 +100	< 400	< 0,5	TPU	●								Idraulica *Hydraulic*	52
	RSP	-30 +90	< 20	< 1	TPU	●								Pneumatica *Pneumatic*	154
	SRS	-30 +90	< 20	< 1	TPU	●								Pneumatica *Pneumatic*	156
	SRS/N	-30 +100	< 12	< 1	NBR				●					Pneumatica *Pneumatic*	158
GUARNIZIONI AMMORTIZZO / *CUSHION SEALS*															
	CSA	-30 +90	< 20	< 1	TPU	●								Pneumatica *Pneumatic*	160

GUARNIZIONI PISTONE / *PISTON SEALS*

Condizioni massime non simultanee / *Maximum conditions (not combined)*

Profilo *Profile*	Ns Rif. *Our Ref.*	Temperatura *Temperature* C°	Pressione *Pressure* Bar	Velocità *Speed* m/s	Materiale *Material*	TPU	POM	PTFE Bronze	NBR	TPE	Resina	PTFE Carbo.	PTFE	Sezione *Section*	Pagina *Page*
	RPS	-35 +100	< 400	< 0,5	TPU	●								Idraulica *Hydraulic*	52
	PSA	-35 +100	< 400	< 0,5	TPU	●								Idraulica *Hydraulic*	58
	PAE	-35 +100	< 500	< 0,5	TPU POM	●	○							Idraulica *Hydraulic*	62
	PSH+RR	-35 +100	< 400	< 0,5	TPU POM	●	○							Idraulica *Hydraulic*	64
	PSO	-30 +100	<250 < 500 materiale standard standard materials	< 0,5	TPU NBR	●			●					Idraulica *Hydraulic*	66
	PSQ	-30 +100	< 250 < 500 materiale alternativo alternative materials	< 0,5	TPU NBR	●			●					Idraulica *Hydraulic*	70
	TPD	-30 +120	< 600	15	PTFE bronzo/ bronze NBR			●	●					Idraulica *Hydraulic*	72
	KDSA	-30 +100	< 300	< 0,5	POM NBR TPE		○		●	●				Idraulica *Hydraulic*	74
	KDSB	-30 +100	< 300	< 0,5	POM NBR TPE		○		●	●				Idraulica *Hydraulic*	76
	KDSP	-30 +100	< 300	< 0,5	TPU POM	●	○							Idraulica *Hydraulic*	80
	KDAE	-30 +100	< 400	< 0,5	TPU TPE	●				●				Idraulica *Hydraulic*	82
	PSP	-30 +90	< 20	< 1	TPU	●								Pneumatica *Pneumatic*	162
	PSP/N	-30 +100	< 20	< 1	NBR				●					Pneumatica *Pneumatic*	166
	 MPS	-30 +90	< 20	< 1	TPU	●								Pneumatica *Pneumatic*	168
 	MPS/a	-30 +90	< 20	< 1	TPU	●								Pneumatica *Pneumatic*	170
	SPS	-30 +90	< 20	< 1	TPU	●								Pneumatica *Pneumatic*	172
	SPS/N	-30 +100	< 12	< 1	NBR				●					Pneumatica *Pneumatic*	174
	MPP	-30 +100	< 20	< 1	NBR STEEL				●					Pneumatica *Pneumatic*	176

RASCHIATORI / *WIPERS*

Condizioni massime non simultanee / *Maximum conditions (not combined)*

Profilo *Profile*	Ns Rif. *Our Ref.*	Temperatura *Temperature* C°	Pressione *Pressure* Bar	Velocità *Speed* m/s	Materiale *Material*	TPU	POM	PTFE Bronzo	NBR	TPE	Resina	PTFE Carbo.	PTFE	Sezione *Section*	Pagina *Page*
	WSL	-35 +100	-	< 1	TPU	●								Idraulica *Hydraulic*	100
	WSG	-35 +100	-	< 1	TPU STEEL	●								Idraulica *Hydraulic*	104
	RD9	-30 +100	-	< 1	NBR STEEL				●					Idraulica *Hydraulic*	106
	WWS	-35 +100	-	< 1	TPU	●								Idraulica *Hydraulic*	108
	WAT	-35 +100	-	< 1	TPU	●								Idraulica *Hydraulic*	110
	TRD	-30 +120	-	< 15	PTFE bronzo/ bronze NBR			●	●					Idraulica *Hydraulic*	112
	WED	-35 +100	< 20	< 1	TPU	●								Idraulica *Hydraulic*	114
	WEL	-35 +100	-	< 1	TPU	●								Idraulica *Hydraulic*	118
	LWA	-30 +90	-	< 1	TPU	●								Pneumatica *Pneumatic*	186
	BWA	-30 +90	< 20	< 1	TPU	●								Pneumatica *Pneumatic*	188
	BWA/N	-30 +100	< 20	< 1	NBR				●					Pneumatica *Pneumatic*	190
	BWS	-30 +90	< 20	< 1	TPU	●								Pneumatica *Pneumatic*	192
	BWH	-30 +90	< 20	< 1	TPU	●								Pneumatica *Pneumatic*	196
	BWH/N	-30 +100	< 20	< 1	NBR STEEL				●					Pneumatica *Pneumatic*	198

ANELLI DI GUIDA / *WEAR RINGS*

Condizioni massime non simultanee / *Maximum conditions (not combined)*

Profilo *Profile*	Ns Rif. *Our Ref.*	Temperatura *Temperature* C°	Pressione *Pressure* Bar	Velocità *Speed* m/s	Materiale *Material*	TPU	POM	PTFE Bronze	NBR	TPE	Resina	PTFE Carbo.	PTFE	Sezione *Section*	Pagina *Page*
	HIS HES	-40 +115	-	< 0,8	POM fibra di vetro pass fibres		○							Idraulica *Hydraulic*	84/88
	NG	-40 +200	-	15	PTFE bronzo/ bronze			●						Idraulica *Hydraulic*	94/96
	HPW I-E	-40 +130	-	< 1	Resina Fenolica						●			Idraulica *Hydraulic*	96/98
	ISA	-35 +115	-	< 1	POM modificato/*modified*		○							Pneumatica *Pneumatic*	178
	ESA	-40 +115	-	< 1	POM modificato/*modified*		○							Pneumatica *Pneumatic*	180
	NG	-40 +200	-	15	PTFE carbografite							●		Pneumatica *Pneumatic*	184

O-RING / *O-RING*

	OR	vedi specifiche mescole o-ring see specifications of o-ring compounds												Statica *Static*	132

ANELLI ANTIESTRUSIONE / *BACK-UP RINGS*

	RAE	-30 +120	-	< 0,8	TPE					●				Statica *Static*	136
	AKN	-30 +100	-	< 0,8	NBR				●					Statica *Static*	136
	AKC	-40 +200	-	< 0,8	PTFE								○	Statica *Static*	136
	AKW	-40 +200	-	< 0,8	PTFE								○	Statica *Static*	136
	AKS	-40 +200	-	< 0,8	PTFE								○	Statica *Static*	136

GUARNIZIONI STATICHE / *STATIC SEALS*

	SSA	-35 +100	< 400	-	TPU	●								Statica *Static*	124
	FSA	-35 +100	< 500	-	TPU	●								Statica *Static*	128
	VRA	-35 +100	-	-	TPU	●								Statica *Static*	130

Sezione tecnica
Technical overview

Introduzione

In un cilindro i fattori che influenzano l'intero sistema di tenuta sono molteplici e vanno tutti presi in seria considerazione fin dalla fase di progettazione. Anche il costruttore di ogni singolo componente quale una tenuta, un raschiatore o un anello di guida, deve sentire questa responsabilità utilizzando i materiali più idonei e progettando i profili più adatti. La collaborazione fra entrambe le parti diviene così fondamentale per la realizzazione nel tempo di un team unico che mette a disposizione informazioni ed esperienze con lo scopo di migliorare sempre il proprio prodotto.
Un semplice rapporto cliente/fornitore non fa parte delle nostre aspettative.
Nei paragrafi che seguono ARTIC SEALS intende perseguire questa filosofia di lavoro iniziando a puntare l'obiettivo sui fattori che intervengono durante l'esercizio di un sistema di tenuta e proseguendo con ulteriori informazioni e consigli di carattere generale.

Introduction

The sealing capability of a cylinder is influenced by many factors and these factors must be taken into consideration starting from the project phase. The manufacturer of each single component, like a seal, wiper or wear ring, has a responsibility on the proper function of the cylinder and must therefore consider the most appropriated materials and design the most suitable profiles. This target can be only reached when there's a team able to concentrate the synergies between the parties involved (manufacturer of the final product and sealing elements manufacturer) and interchanging information and experience in order to continuously enhance the products.
In the next paragraphs we'll focus on the factors influencing the sealing systems according to ARTIC SEALS' philosophy.

Pressione

Valori di pressione troppo elevati combinati con giochi d'accoppiamento eccessivi tra stelo/testata e camicia/pistone, nel medio termine, provocano un deterioramento della guarnizione causato dall'estrusione con conseguenti perdite del fluido.
Oltre alla normale pressione di esercizio generata dal sistema idraulico, nel cilindro possono intervenire altre pressioni: variabili, improvvise e di valore altissimo. Ciò accade quando la macchina, equipaggiata con cilindri idraulici, a causa di fatori esterni, incorre in situazioni anomale e di forte carico. I picchi di pressione che ne conseguono influenzano negativamente tutto il sistema.
In situazioni opposte e cioè con pressioni modeste o prossime allo zero diviene più apprezzabile la qualità e la conseguente efficacia della guarnizione.
La perfetta tenuta è infatti più difficile da realizzare perchè affidata principalmente al modulo elastico

Pressure

Too high pressure values, combined with important clearance between rod/head and bore/piston couplings may cause on medium term basis, seal wear and therefore leakages because of extrusion effects. In addition to the normal working pressure made by the hydraulic system, inside the cylinder we may have other pressures, variable, sudden and with very high value. It can be caused when the machine, equipped with hydraulic cylinders, needs to face abnormal situations with high loads, because of external factors.
The originated pressure peaks negatively influence all the system.
In opposite conditions (low pressures) the quality and efficiency of the sealing element become more appreciable because a perfect sealing is more difficult to be obtained since it's mainly influened by the material elastic modulus and its profile,

del materiale con cui è realizzata ed al suo profilo, progettato per ottimizzare il precarico iniziale di montaggio. L'assenza o quasi di pressione non permette il relativo carico dei labbri della guarnizione contro la superficie di contatto.
In entrambe le situazioni risulta appropriato l'impiego di tenute specifiche. La gamma dei prodotti proposta offre un'ampia scelta di profili che, abbinati a varie tipologie di materiali come poliuretani, gomme e polimeri in PTFE, trovano la soluzione ideale in tutte le applicazioni.

developed to optimize the initial assembling preload. The use of specific sealing will be required in both cases.
Artic Seals finds the right solution in all applications, thanks to the wide range of profiles, combined with different materials as Polyurethanes, Rubber compounds and PTFE compounds.

Temperatura

In un cilindro la temperatura del fluido, quella generata dall'attrito dell'elemento di tenuta e quella ambientale influenzano notevolmente il comportamento delle guarnizioni e le loro prestazioni.
I valori critici che vengono presi in considerazione, oltre i quali possono comparire problemi, sono quelli superiori a 90° C e inferiori a -30° C.
In entrambi i casi varia notevolmente la viscosità del fluido e il suo potere di lubrificazione, basilari per il mantenimento del microfilm d'olio che si crea tra il labbro di tenuta e la superficie di scorrimento.
Tale pellicola lubrificante è funzione della pressione idrodinamica generata dalla velocità del sistema ed in sua assenza l'attrito che ne deriva "brucia" la guarnizione in poco tempo.

A queste temperature il rischio maggiore è però una conseguente variazione di stato dell'elemento di tenuta che riguarda la composizione del materiale, la sua forma e la sua durezza. Il GRUPPO GAPI, con la sua vasta gamma di prodotti e materiali può soddisfare tutte le variazioni di temperatura in un campo di applicazione che è compreso tra -50°C e +220 °C.

Temperature

Fluid and ambient temperatures, as well as the temperature generated by the friction of the sealing element , considerably influence the behaviour and performance of the seals inside a cylinder.
The critical values originating some of the problems can be considered temperatures higher than 90° C and lower than -30° C.
In these two cases huge changes appear in the viscosity of the fluid and in its lubricating power both of which are fundamental to maintain an oil microfilm between the sealing lip and the running surface.
This lubricating film is related to the hydraulic pressure resulting from the system speed. The friction created in case of absence of the film will quickly "burn" the seal.
The main risk at these temperature could be a change of the sealing element, influencing the material composition, shape and hardness. GAPI GROUP, thanks to the wide range of products and materials can satisfy all temperature variations in the operating range from -50°C up to +220°C.

Velocità

Quando si parla di velocità alcune sono le variabili da tenere in considerazione: la rugosità delle superfici di contatto, la temperatura dell'olio, la pressione d'esercizio.
Queste tre variabili insieme al tipo di materiale della guarnizione possono determinare il valore massimo della velocità sostenibile dal sistema.

La velocità con valori compresi tra 0,03 e 0,3 m/s normalmente non compromette il funzionamento del sistema di tenuta.
In presenza di velocità molto basse la modesta pressione idrodinamica non riesce a mantenere costante lo spessore del meato d'olio che si crea tra i labbri della guarnizione e superficie di scorrimento. Esso tende a rompersi e ricrearsi in continuazione e l'attrito che ne deriva genera un movimento a "scatti" (stick slip) con conseguente usura della guarnizione.
Al contrario, a velocità troppo elevate la pressione idrodinamica tende invece a "staccare" il labbro di tenuta dalla superficie di contatto. In questa zona aumenta la temperatura e diminuisce la viscosità del fluido con conseguente perdita.

Le tipologie di materiali proposte da ARTIC SEALS riescono a soddisfare tutte le esigenze di variazioni di velocità. L'utilizzo di varie mescole di poliuretani, di gomme e di compound di PTFE, permettono di operare in tutte le diverse velocità richieste.

Speed

Some factors have to be taken into consideration when evaluating the speed: in particular the contact surfaces roughness, the oil temperature and the operating temperature.
These three factors combined with seal material, influence very much the maximum speed the system can support.
Speed values between 0.03 to 0.3 m/s do not usually compromise the functioning of the sealing system.
In the case of very low speed, the minimal hydraulic pressure cannot ensure a standard thickness of the oil film between the seal lips and the sliding surface. The film will rather break and reform continuously. The resulting friction will induce a stick slip effect and result in the wearing of the seal.
On the opposite side, in the case of excessive speed, the hydraulic pressure may "detach" the sealing lip from the contact surface. In this area the temperature will rise up and the fluid viscosity will fall. Leakages will occur.
The different materials proposed by Artic Seals can satisfy all the speed variation requests. The use of different compounds of polyurethane, rubber and PTFE allows working with different operating speeds.

Fluidi

In un cilindro idraulico sono normalmente utilizzati oli a base minerale oppure oli ecologici biodegradabili.
Le caratteristiche di ciascun tipo di fluido vengono abitualmente vagliate dal produttore e dall'utilizzatore finale in base ad esigenze specifiche.
Possono però insorgere dubbi sulla compatibilità

Fluids

Mineral oils or green biodegradable oils are mainly used in a hydraulic cylinder.
The manufacturer and the end-user generally check the characteristics of each fluid, according to their specific requirements.
However doubts can arise regarding the compatibility between oils and sealing systems. Many tests have been carried out with positive

con le guarnizioni di tenuta.
Sono stati effettuati parecchi test, soprattutto con oli ecologici, che hanno sempre dato esito positivo. Quando però manca questa sicurezza, per esempio nel caso di un lubrificante poco noto o comunque mai testato, ARTIC SEALS si rende disponibile a verificare la compatibilità nel proprio laboratorio In caso di fluidi diversi da quelli tradizionali o comunque addizionati con sostanze particolari si pone il problema della resistenza chimica delle guarnizioni.
La tabella 1 che segue vuole fornire indicazioni in tal senso e si riferisce specificatamente ai materiali utilizzati da ARTIC SEALS.

results, in particular with green Oils. Artic Seals is available to carry out tests of compatibility on unknown lubricants or oils without any literature regarding the compatibility; the tests will be made in the Artic Seals laboratory. This can be very helpful when the lubricants aren't standard and/or contain particular additives which could influence the chemical resistance of the seals.
The table 1 provides indications about the compatibility and is referred to the Artic Seals' material .

Materiali

Gli elementi di un sistema di tenuta sono molteplici ed ognuno deve avere caratteristiche che gli permettano di svolgere la propria funzione nel migliore dei modi ed in condizioni non sempre simili. La scelta dei materiali assume così un'importanza tale da farne il primo fattore strategico per ogni costruttore.
ARTIC SEALS, forte della propria esperienza, ha scelto:

- resine uretaniche in cinque differenti tipologie. Presentano tutte alto modulo elastico e bassa deformazione permanente e con durezze diverse a seconda dell'utilizzo.
  Con esse vengono realizzate guarnizioni di tenuta per stelo e pistone, anelli raschiatori ed alcuni tipi di tenuta statica;
- resine acetaliche di due differenti tipologie. La prima caricata con fibre di vetro ed elevata resistenza alla deformazione permanente sotto carico, utilizzata in oleodinamica. La seconda, priva di cariche, ma additivata con sostanze autolubrificanti, impiegata in pneumatica quando direttamente a contatto con metalli teneri come l'alluminio e l'ottone. Con esse vengono realizzati anelli di guida per steli e pistoni o componenti aventi la stessa funzione di alcune guarnizioni

Materials

A sealing system is made of several components each one having properties.
These properties allow the component to work in proper way in different conditions.
Therefore, the first strategic factor for the manufacturer is the right choice of materials.

Artic Seals, thanks to the long experience, selected the following materials:

- *five types of urethane resins. They have a high modulus of elasticity, low compression-set and hardness according to the application.*
  They are used for rod and piston seals, scraper rings and some static seals production.
- *two types of acetalic resins. The first one, used for hydraulic applications, is filled with fibreglass and has low compression-set. The second one is not filled but contains self-lubricant additives. It is used in pneumatic systems where there is direct contact with soft metals (like aluminium or brass). They are used for rod and piston wiper rings or other components production, having the same function of the composite seals.*
- *filled polyester resins, used in the production of anti-extrusion rings and in some composite seals;*

Tab. 1 - Resistenza chimica dei materiali - *Chemical resistance of materials*

		poliuretano *polyurethane*	Resine acetaliche *Acetalic resin*	Elastomero termoplastico *Thermoplastic elastomer*	Gomma nitrilica *Nitril rubber*	Gomma nitrilica idrogenata *Hydrogenated nitric rubber*	Etilene propilene *Ethylene propylene*	Fluoroelastomero *Fluoroelastomer*	Fluorosilicone *Fluorosilicone*	Politetrafluoroetilene *Polytetrafluoroethylene*
Fluido	***Fluid***	**PU**	**POM**	***TPE***	***NBR***	***HNBR***	***EPDM***	***FKM***	***VMQ***	***PTFE***
acetato di etilene	*ethyl acetate*	●	●●●	●●	●	●	●●●	●	●	●●●
aceto	*vinegar*	●	●●●	●●●	●●	●●	●●●	●●	●●●	●●●
acetone	*acetone*	●	●●●	●●●	●	●	●●●	●	●	●●●
acido acetico (20%)	*acetic acid (20%)*	●	●●	●●●	●●	●●	●●●	●●	●●	●●●
acido acetico (5%)	*acetic acid (5%)*	●	●●●	●●●	●●	●●	●●●	●●	●●●	●●●
acido acetico (50%)	*acetic acid (50%)*	●	●	●●	●	●	●●●	●	●	●●●
acido citrico	*citric acid*	●	●●	●●	●●●	●●●	●●●	●●●	●●●	●●●
acido cloridrico (10%)	*chloric acid (10%)*	●	●	●●	●	●	●●	●●	●	●●●
acido cloroacetico (10%)	*chloroacetic acid (10%)*	●	●	●●	●	●	●●●	●	●	●●●
acido cromico (10%)	*chromic acid (10%)*	●	●	●●	●	●	●●	●●●	●	●●●
acido fluoridrico (10%)	*hydrofluoric acid (10%)*	●	●	●●	●	●	●●	●	●	●●●
acido formico	*formic acid*	●	●	●●	●	●	●●	●	●	●●●
acido fosforico (30%)	*phosphoric acid (30%)*	●	●	●●	●	●	●●●	●●●	●	●●●
acido muriatico	*muriatic acid*	●	●	●●	●	●	●●	●●●	●	●●●
acido nitrico (10%)	*nitric acid (10%)*	●	●	●●	●	●	●	●●●	●	●●●
acido oleico	*oleic acid*	●	●●●	●●	●●●	●●●	●	●●●	●	●●●
acido palmitico	*palmitic acid*	●●	●●●	●●●	●●	●●	●	●●●	●	●●●
acido perclorico (10%)	*perchloric acid (10%)*	●	●	●●●	●	●	●●	●●●	●	●●●
acido solforico (30%)	*sulphuric acid (30%)*	●	●	●●●	●	●	●●●	●●●	●	●●●
acido tartarico	*tartaric acid*	●	●	●●	●●●	●●●	●●	●●●	●●●	●●●
acido tricloroacetico	*trichloroacetic acid*	●	●	●●●	●●	●●	●●	●	●●	●●●
alcol metilico	*methyl alcohol*	●	●●●	●●	●●●	●●●	●●●	●	●●●	●●●
acqua	*water*	●●	●●●	●●	●●●	●●●	●●●	●●●	●●●	●●●
acqua 100°C	*water 100°C*	●	●●●	●●	●●	●●●	●●●	●●	●●	●●●
acqua clorurata >0,5 ppm	*chlorine ater >0.5 ppm*	●	●●●	●●●	●	●	●●	●●●	●	●●●
acqua distillata	*distilled water*	●●	●●●	●●●	●●	●●●	●●	●●	●●●	●●●
acqua glicole	*glycol water*	●●	●●●	●●	●●●	●●●	●●●	●●●	●●●	●●●
acqua marina	*sea water*	●●●	●●●	●●●	●●●	●●●	●●●	●●●	●●	●●●
acqua olio	*oil water*	●●	●●●	●●●	●●●	●●●	●	●●●	●●●	●●●
acqua ossigenata (1%)	*hydrogen peroxide (1%)*	●	●●●	●●●	●●	●●	●●	●●●	●●●	●●●
acqua ossigenata (30%)	*hydrogen peroxide (30%)*	●	●	●●●	●	●	●	●●●	●●	●●●
alcol etilico	*ethanol*	●	●●	●●●	●●●	●●●	●	●●●	●●	●●●
ammoniaca (10%)	*ammonia (10%)*	●	●	-	●●●	●●●	●●●	●	●	●●●
anidride carbonica	*carbon dioxide (wet and dry)*	●	●●●	●●●	●●●	●●●	●●	●●●	●●	●●●
anidride solforosa	*sulphur dioxide*	●	●	●●●	●	●	●●●	●●	●●	●●●
anilina	*aniline*	●	●●	●	●	●	●●●	●	●	●●●
aria	*air*	●●●	●●●	●●●	●●●	●●●	●●●	●●●	●●●	●●●
azoto	*nitrogen*	●●●	●●	●●●	●●●	●●●	●●●	●●●	●●●	●●●
benzina	*benzine (gasoline)*	●●●	●●●	●●●	●●	●	●	●●●	●	●●●
benzolo	*benzol*	●	●●●	●●	●	●	●	●●	●	●●●
birra	*beer*	●	-	●●●	●●●	●●●	●●●	●●●	●●●	●●●
butano	*butane*	●●●	●●●	●●●	●●●	●●●	●	●●●	●	●●●
caffè	*coffee*	●	●●●	●●	●●●	●●●	●●●	●●●	●●●	●●●
candeggiante (10%)	*bleach solution (10%)*	●	●	●●	●	●	●●●	●●●	●	●●●
carburante diesel	*diesel fuel*	●●	●●●	●●●	●●●	●●●	●	●●●	●	●●●
cherosene	*kerosene*	●●	●●●	●●●	●●●	●●●	●	●●●	●	●●●
ciclo esano	*cyclo hexane*	●●●	●●●	●●●	●●●	●●●	●	●●●	●	●●●
cloroformio	*chloroform*	●	●●	●●	●	●	●	●●	●	●●●

V*alori indicativi/indicative values* **●●●=buono/ *good*** **●●=sufficiente/ *fair*** **●=insufficiente/ *unfair***

Condizioni di prova: a temperatura ambiente - testa su provette
Operating conditions: room temperature - tested specimens

Tab. 1 - Resistenza chimica dei materiali - *Chemical resistance of materials*

Fluido	*Fluid*	PU	POM	*TPE*	*NBR*	*HNBR*	*EPDM*	*FKM*	*VMQ*	*PTFE*
		poliuretano *polyurethane*	Resina acetalica *Acetalic resin*	Elastomero termoplastico *Thermoplastic elastomer*	Gomma nitrilica *Nitril rubber*	Gomma nitrilica idrogenata *Hydrogenated nitrile rubber*	Etilene propilene *Ethylene propylene*	Fluoroelastomero *Fluoroelastomer*	Fluorosilicone *Fluorosilicone*	Politetrafluoroetilene *Polytetrafluoroethylene*
cloruro di calcio (10%)	*calcium chloride (10%)*	●	●●●	●●●	●●●	●●●	●●●	●●●	●●●	●●●
cloruro di sodio (10%)	*sodium chloride (10%)*	●	●●	●●●	●●●	●●●	●●●	●●●	●●●	●●●
eptano	*heptane*	●●●	●●●	●●●	●●●	●●●	●	●●●	●	●●●
esano	*hexane*	●●●	●●●	●●●	●●●	●●●	●	●●●	●	●●●
etanolo	*ethanol*	●	●●●	-	●	●	●●	●	●	●●●
etere etilico	*ether*	●	●●●	-	●	●	●●	●	●	●●●
fluido per freni	*brake fluid*	●	●●●	●	●	●	●●●	●	●	●●●
formaldeide (37%)	*formaldehyde (37%)*	●	●●●	●●	●	●	●●●	●	●	●●●
freon 11	*freon 11*	●	●●●	●●	●●	●●	●	●●	●	●●●
freon 12	*freon 12*	●●	●●●	●●●	●●	●●	●●	●●●	●	●●●
freon 21	*freon 21*	●●	●●●	●●●	●	●	●	●	●	●●●
freon 22	*freon 22*	●	●●●	●●	●	●	●●●	●	●	●●●
freon 113	*freon 113*	●●●	●●●	●●●	●●	●●●	●	●●	●	●●●
freon 114	*freon 114*	●●●	●●●	●●●	●●●	●●●	●●●	●●	●	●●●
gas naturale	*natural gas*	●●	●●●	●●●	●●●	●●●	●	●●●	●	●●●
gas propano	*propane gas*	●●●	●●●	●●●	●●●	●●●	●	●●●	●	●●●
gasolio	*diesel oil*	●●●	●●●	●●●	●●●	●●●	●	●●●	●	●●●
glicerina	*glycerine*	●	●●●	●●	●●●	●●●	●●●	●●●	●●●	●●●
glicole	*ethylene glycol*	●	●●●	●●●	●●●	●●●	●●●	●●●	●●●	●●●
glucosio	*glucose solution*	●	●●●	-	●●●	●●●	●●●	●●●	●●●	●●●
grasso minerale	*mineral grease*	●●●	●●●	●●●	●●●	●●●	●	●●●	●●	●●●
idrogeno gas	*hydrogen gas*	●●●	●●●	●●●	●●●	●●●	●●●	●●●	●	●●●
ipoclorito di sodio (5%)	*sodium hypochlorite (5%)*	●	●	●●●	●●	●●	●●●	●●●	●●	●●●
latte	*milk*	●	●●●	-	●●●	●●●	●●●	●●●	●●●	●●●
mercurio	*mercury*	●●●	●●●	●●●	●●●	●●●	●●●	●●●	●●●	●●●
metano	*methane*	●●●	●●●	●●●	●●●	●●●	●	●●●	●●●	●●●
metiletilchetone	*methyl ethyl ketone*	●	●●	●●●	●	●	●●	●●	●	●●●
oli vegetali	*vegetal oils*	●●●	●●●	●●●	●●●	●●●	●	●●●	●	●●●
olio al silicone	*silicone oil*	●●●	●●●	●●●	●●●	●●●	●●	●●●	●	●●●
olio ASTM 1	*oil ASTM 1*	●●●	●●●	●●●	●●●	●●●	●	●●●	●●●	●●●
olio ASTM 3	*oil ASTM 3*	●●●	●●●	●●●	●●●	●●●	●	●●●	●●	●●●
olio combustibile	*fuel oil*	●●●	●●●	●●●	●●	●●	●	●●●	●	●●●
olio lubrificante	*lubricating oil*	●●●	●●●	●●●	●●●	●●●	●	●●●	●●	●●●
olio minerale	*mineral oil*	●●●	●●●	●●●	●●●	●●●	●	●●●	●●	●●●
olio paraffinico	*paraffin oil*	●●●	●●●	●●●	●●●	●●●	●	●●●	●	●●●
olio per motore	*engine oil*	●●	●●●	●●●	-	-	●	●●●	-	●●●
ossido di carbonio	*carbon dioxide*	●●●	●●●	●●●	●●●	●●●	●●	●●●	●●●	●●●
ossigeno	*oxygen*	●●	●●●	●●●	●	●	●●●	●●●	●●●	●●●
ozono	*ozone*	●●	●●●	●●●	●	●	●●●	●●●	●●●	●●●
paraffina	*paraffin*	-	●●●	●●●	●●●	●●●	●	●●●	●●	●●●
percloro etilene	*perchlore ethylene*	●	●●	●●●	●	●	●	●●●	●●●	●●●
succo di frutta	*fruit juices*	●	●●●	-	●●	●●	●●●	●●	●●●	●●●
trementina/acquaragia	*turpentine*	●	●●●	-	●●●	●●●	●	●●●	●	●●●
urea (5%)	*urea (5%)*	●	●●●	-	●●●	●●●	●●●	●●●	●●●	●●●
vapore	*vapour*	●	●●●	-	●	●	●●	●●●	●●	●●●
vaselina	*vaseline*	●●	●●●	●●●	●●●	●●●	●●	●●●	●	●●●
vino	*wine*	●	●●	●●	●●●	●●●	●●●	●●●	●●●	●●●

V*alori indicativi/indicative values* **●●●=buono/ *good*** **●●=sufficiente/ *fair*** **●=insufficiente/ *unfair***

Condizioni di prova: a temperatura ambiente - testi su provette
Operating conditions: room temperature - tested specimens

composte;
- resine poliesteri e caricate, utilizzate per la costruzione di anelli antiestrusione e di alcuni particolari di guarnizioni composte;
- elastomeri di mescole differenti a seconda dell' applicazione. Il più utilizzato è quello a base nitrilica NBR per la costruzione di o-ring o di alcuni componenti di guarnizioni composte. Più specifiche altre mescole (FKM, EPDM, ecc..) descritte nella sezione o-ring a pagina 133;
- polimeri in PTFE vergine o caricati con diversi additivi quali il vetro, il carbone, la grafite, il bronzo ed altre cariche minori. Con lavorazione meccanica vengono eseguiti profili che in tandem ad anelli aspansori garantiscono la tenuta.

Nota:
Eventuali variazioni di tonalità di colore possono verificarsi quale garanzia di utilizzo di master-batch esenti da metalli pesanti. Tali leggere variazioni non influiscono sulle caratteristiche meccaniche delle guarnizioni.

Descrizioni più dettagliate e proprietà fisiche dei materiali sono presenti nel catalogo alle sezioni inerenti ai particolari con essi costruiti.

- elastomers in different compounds according to the application. The most used is NBR (Nitrile butadiene rubber) , used for o-rings or some composite seals. Other compounds are more specific (FKM, EPDM, etc..) and are described in the o-ring section page 133;
- virgin or filled PTFE polymers with different fillers like glass, carbon, graphite, bronze and other fillers. The shape is obtained by mechanical process then expanders rings are combined to grant the sealing.

Remarks:
Possible deviation in colour may occur due to the use of heavy metal-free master batches. Such a slightly variation does not influence the mechanical characteristics of the seals.
More detailed information and the physical properties of the materials, can be found in the section of each specific sealing part.

Rugosità superficiali

La durata e l'efficacia di una guarnizione dipendono dalla qualità della superficie dell'area di contatto. Graffi, fori, porosità, segni di lavorazione di utensile non sono ammessi.
E' necessario porre molta attenzione alla qualità delle superfici, soprattutto dove scorre dinamicamente la guarnizione (vedi Tabella 2).
I parametri utilizzati per definire la finitura superficiale sono Ra, Rz, Rmax e sono in conformità alla ISO 4287/1.
La Tabella 3 evidenzia chiaramente che non è sufficiente considerare solo i valori di Ra e Rz per valutare il tipo di guarnizione da adottare.
I picchi superficiali mostrano chiaramente che a

Surface roughness

The service life of a seal depends on the quality of the contact area's surface.
Scratches, holes, snicks, porosity and tooling marks should be avoided.
It's very important to take care about the quality of the surfaces, in particular where the seal slides dynamically (see Table 2).
The most common parameters to define the surface quality are Ra, Rz, Rmax and they're in accordance with ISO 4287/1.
Table 3, in order to select the seal to be used, couldn't be enough the evaluation of the Rz and Ra values. The surface peaks clearly show that in case of equal values of Rz and Ra, the profile having less

parità di valori Ra e Rz, il profilo con minori asperità (vedi RMR) ha con la guarnizione una maggiore superficie di contatto con evidente beneficio per la durata della stessa.
Per i materiali utilizzati da ARTIC SEALS sono consigliate le rugosità di lavorazione qui di seguito indicate in tabella 3:

peaks (see RMR) present a wider contact surface with the seal and this will give the seal a longer lifetime. The working roughness suggested for the materials to be used with our seals are indicated in the following table 3.

Tab. 2 - rugosità superficiale / *surface roughness*

	superficie di scorrimento consigliata per il poliuretano ***sliding surface recommended for polyurethane***	**superficie della cava** ***static surface***
R_{max}	1,00 - 4,00	< 10,0
$R_{z\,DIN}$	0,63 - 2,50	< 6,3
R_a	0,10 - 0,60	< 1,6

Tab. 3 - profili superficie/ surface profile

Profili superficie ***surface profile***	R_a	R_z	R_{mr}
 profilo aperto *open profile*	0,25	1	15%
 profilo chiuso *closed profile*	0,25	1	70%

Gioco di accoppiamento

L'ampiezza massima consentita del gioco di accoppiamento tra testata/stelo e pistone /camicia deve essere attentamente valutata affinchè non intervengano problemi di estrusione nella parte posteriore della guarnizione. (vedi fig. 1 e 2)
Tale gioco dipende principalmente dalla durezza del materiale con cui è costruita la tenuta, dalla pressione massima presente nel cilindro, dalla temperatura e dalla resistenza al carico radiale degli anelli di guida.

Coupling clearance

The maximum coupling clearance width allowed between head/rod and piston/bore must be carefully evaluated to prevent extrusion problems at the rear of the seal. (see fig. 1 and 2)

Such clearance depends mainly on the hardness of the seal material, on the maximum pressure in the cylinder, on the temperature and on the radial load resistance of the wear rings.

Fig. 1

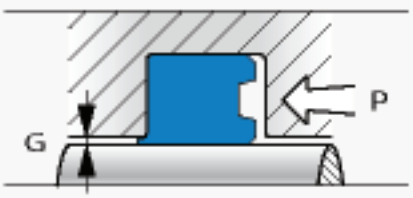

Fig. 2

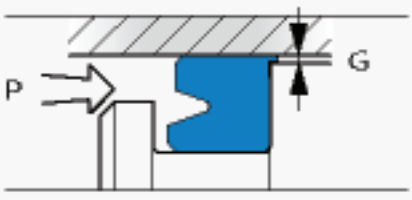

Nella tabella 4 qui di seguito si vede il gioco di accoppiamento che si deve mantenere tra stelo/testata e tra pistone/camicia. Il test è stato eseguito con olio a temperatura a 60° C con materiale 93 Shore A.

The following table 4 shows the clearance coupling to be considered between rod/head and bore/piston.
The test has been made with oil at the temperature of 60°C on 93 Shore A Polyurethane material.

Tab. 4 - *gioco di accoppiamento / coupling clearance*

pressione / pressure BAR	***G* mm**
50	0,50
100	0,40
150	0,30
200	0,15
300	0,10
400	0,05

La figura 3 mostra i valori indicativi del gioco massimo ammesso in funzione della pressione di esercizio utilizzando guarnizioni di materiale e durezza differenti.

The figure 3 shows the indicative values of the allowed clearance, related to the working pressure and using materials with different hardness.

Fig. 3

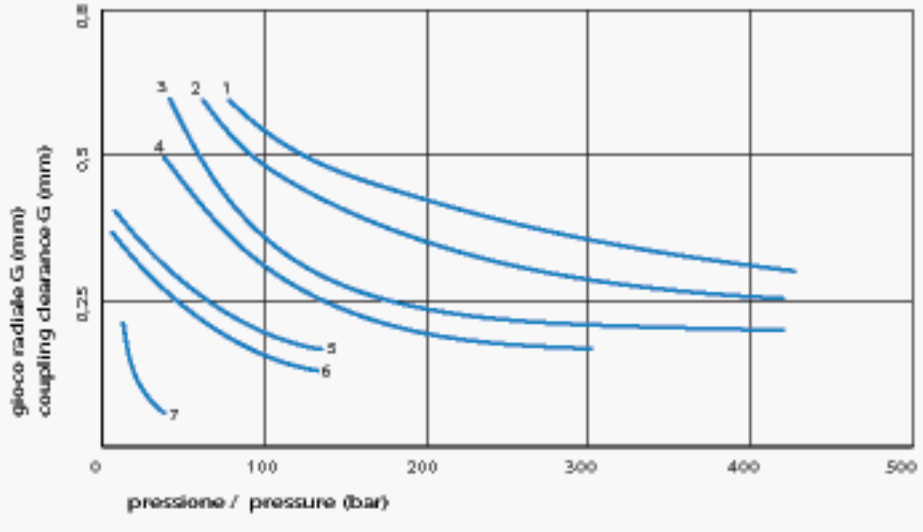

1 - poliuretano 93 Shore A con anello antiestrusione
2 - poliuretano 98 Shore A
3 - poliuretano 93 Shore A
4 - poliuretano 90 Shore A
5 - poliuretano 85 Shore A
6 - NBR 90 Shore A
7 - NBR 70 Shore A

1 - polyurethane 93 Shore A with antiextrusion ring
2 - polyurethane 98 Shore A
3 - polyurethane 93 Shore A
4 - polyurethane 90 Shore A
5 - polyurethane 85 Shore A
6 - NBR 90 Shore A
7 - NBR 70 Shore A

Tab. 5 - Tabella tolleranze - *Tolerances table*

dimensioni nominali *nominal dimensions* Ø mm		albero base *rod* (0.001 mm)								foro base *bore* (0,001 mm)			
da *from*	**a** *to*	**e9**	**f7**	**f8**	**f9**	**h8**	**h9**	**h10**	**h11**	**H8**	**H9**	**H10**	**H11**
1,6	3	-14	-6	-6	-6	0	0	0	0	+14	+25	+40	+60
		-39	-16	-20	-31	-14	-25	-40	-60	0	0	0	0
3	6	-20	-10	-10	-10	0	0	0	0	+18	+30	+48	+75
		-50	-22	-28	-40	-18	-30	-48	-75	0	0	0	0
6	10	-25	-13	-13	-13	0	0	0	0	+22	+36	+58	+90
		-61	-28	-35	-49	-22	-36	-58	-90	0	0	0	0
10	18	-32	-16	-16	-16	0	0	0	0	+27	+43	+70	+110
		-75	-34	-43	-59	-27	-43	-70	-110	0	0	0	0
18	30	-40	-20	-20	-20	0	0	0	0	+33	+52	+84	+130
		-92	-41	-53	-72	-33	-52	-84	-130	0	0	0	0
30	50	-50	-25	-25	-25	0	0	0	0	+39	+62	+100	+160
		-112	-50	-64	-87	-39	-62	-100	-160	0	0	0	0
50	80	-60	-30	-30	-30	0	0	0	0	+46	+74	+120	+190
		-134	-60	-76	-104	-46	-74	-120	-190	0	0	0	0
80	120	-72	-36	-36	-36	0	0	0	0	+54	+87	+140	+220
		-159	-71	-90	-123	-54	-87	-140	-220	0	0	0	0
120	180	-85	-43	-43	-43	0	0	0	0	+63	+100	+160	+250
		-185	-83	-106	-143	-63	-100	-160	-250	0	0	0	0
180	250	-100	-50	-50	-50	0	0	0	0	+72	+115	+185	+290
		-215	-96	-122	-165	-72	-115	-185	-290	0	0	0	0
250	315	-110	-56	-56	-56	0	0	0	0	+81	+130	+210	+320
		-240	-108	-137	-186	-81	-130	-210	-320	0	0	0	0
315	400	-125	-62	-62	-62	0	0	0	0	+89	+140	+230	+360
		-265	-119	-151	-212	-89	-140	-230	-360	0	0	0	0



Sistemi di tenuta per oleodinamica
Hydraulic sealing systems

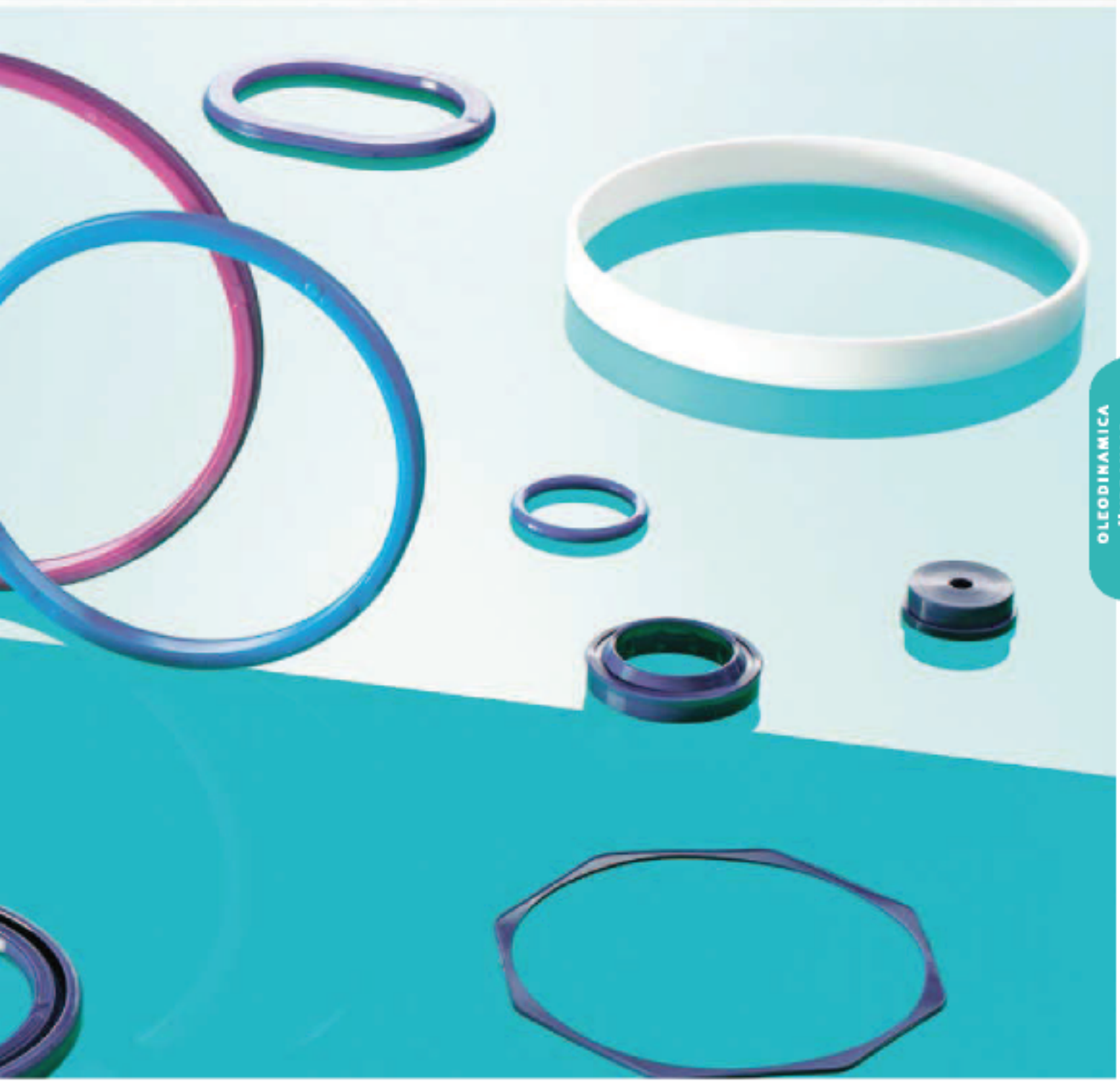

Schema cilindro idraulico A

Hydraulic cylinder sketch A

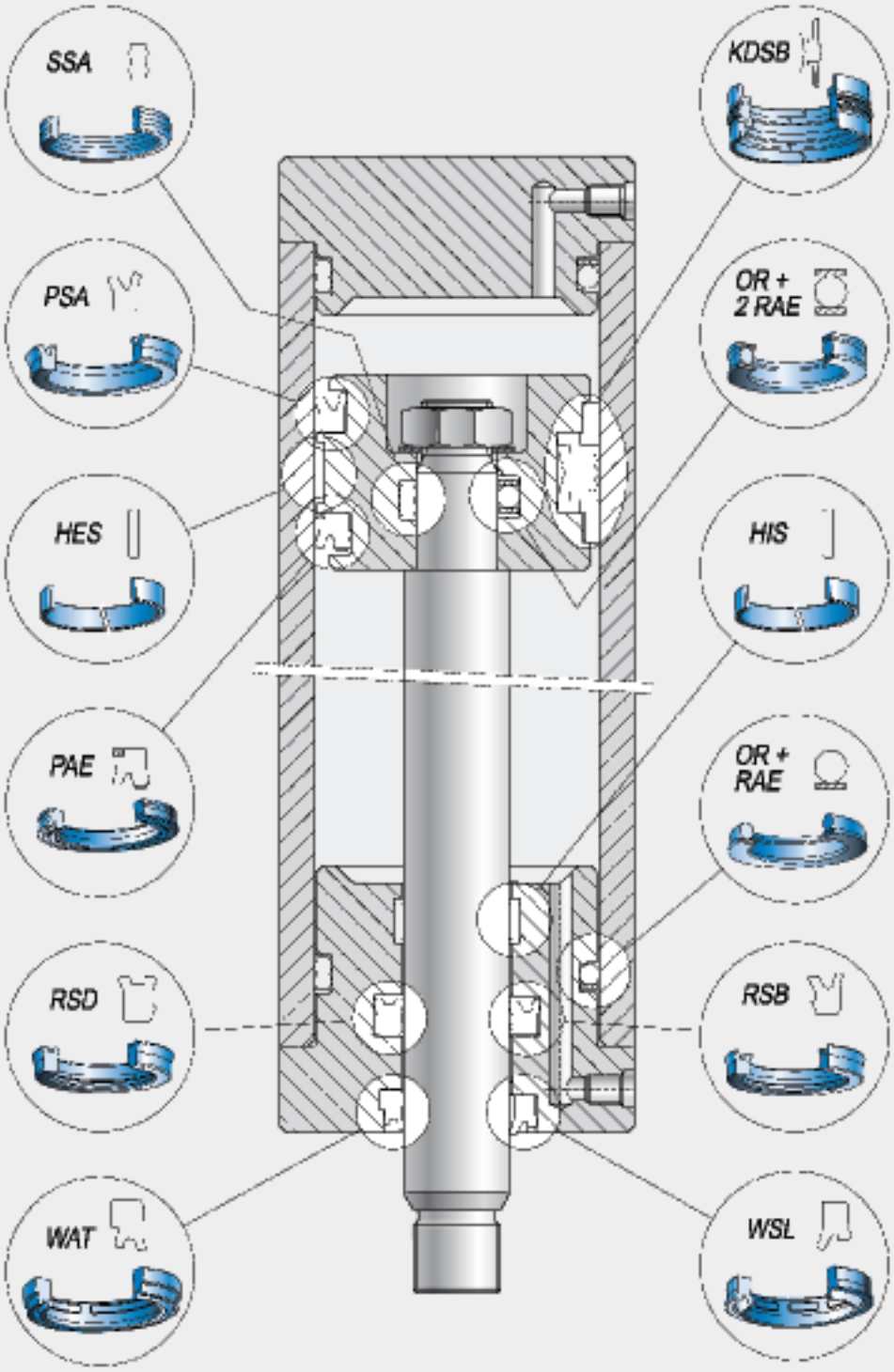

Schema cilindro idraulico B

Hydraulic cylinder sketch B

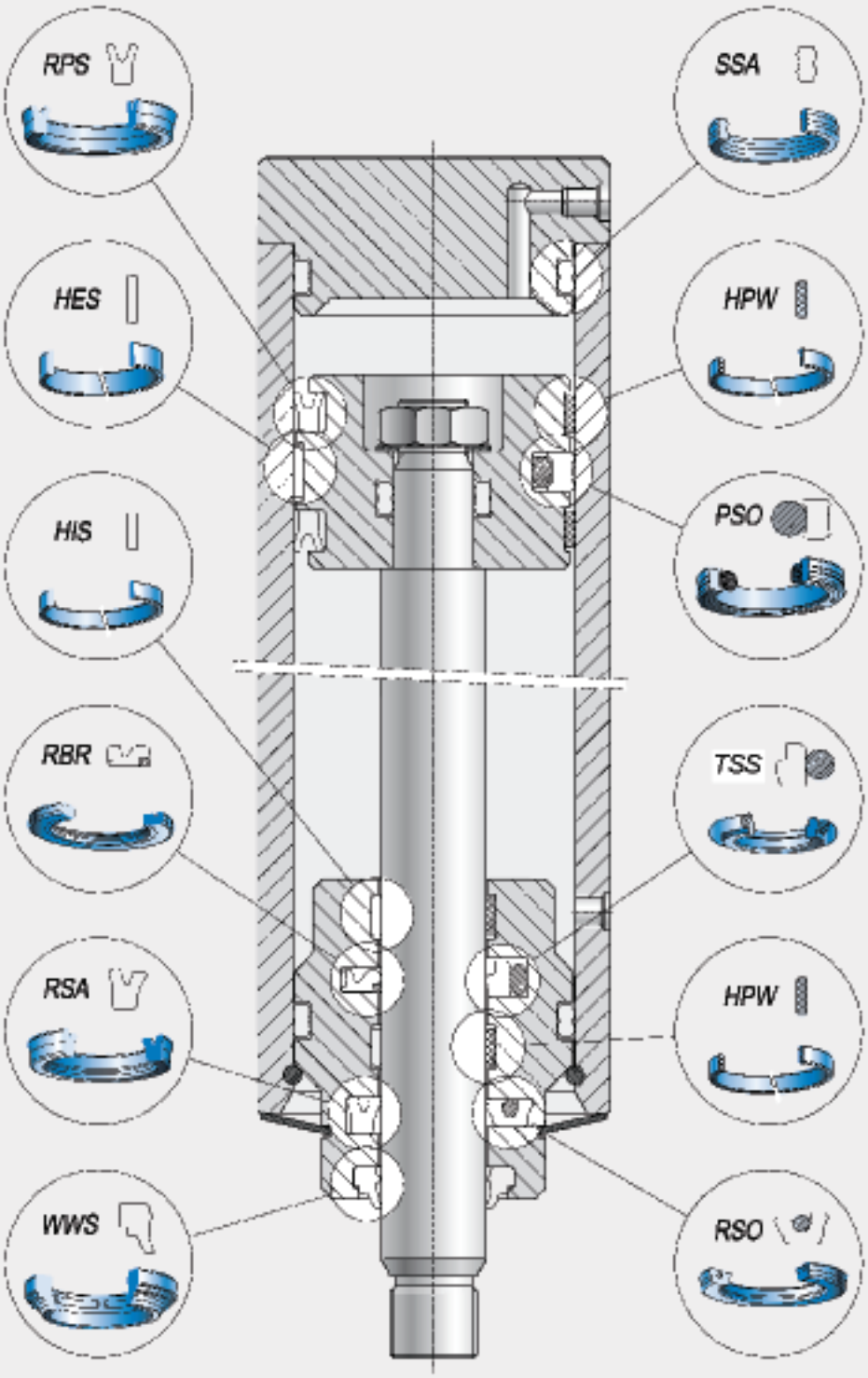

Schema cilindro idraulico C

Hydraulic cylinder sketch C

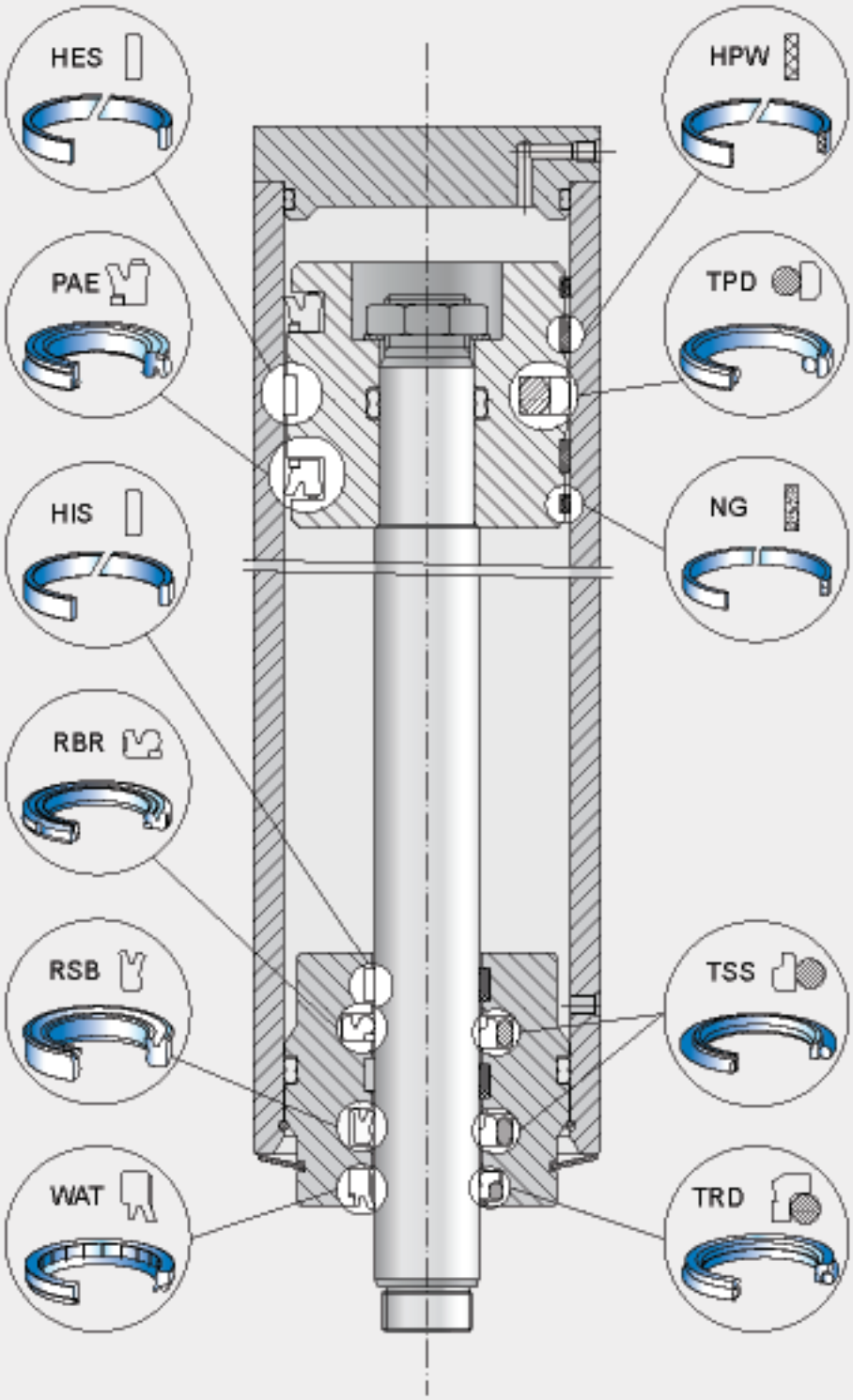

GUARNIZIONI STELO / *ROD SEALS*

Condizioni massime non simultanee / *Maximum conditions (not combined)*

Profilo *Profile*	Ns Rif. *Our Ref.*	Temperatura *Temperature* C°	Pressione *Pressure* Bar	Velocità *Speed* m/s	Materiale *Material*	TPU	POM	PTFE Bronzo	NBR	TPE	Resina	PTFE Carbo.	PTFE	Sezione *Section*	Pagina *Page*
	RSA	-35 +100	< 400	< 05	TPU	●								Idraulica *Hydraulic*	28
	RSB	-35 +100	< 400	< 0,5	TPU	●								Idraulica *Hydraulic*	32
	RSB2	-35 +100	< 500	< 0,5	TPU POM	●	○							Idraulica *Hydraulic*	36
	RSC	-35 +100	< 400	< 0,5	TPU	●								Idraulica *Hydraulic*	38
	RSD	-35 +100	< 400	< 0,5	TPU	●								Idraulica *Hydraulic*	42
	TSS	-30 +120	< 600	15	PTFE bronzo/ bronze NBR			●	●					Idraulica *Hydraulic*	46
	RSO	-35 +100	< 400	< 0,5	TPU NBR	●			●					Idraulica *Hydraulic*	48
	RBR	-35 +100	< 400	< 0,8	TPU POM	●	○							Idraulica *Hydraulic*	50
	RPS	-35 +100	< 400	< 0,5	TPU	●								Idraulica *Hydraulic*	52

GUARNIZIONI PISTONE / *PISTON SEALS*

Condizioni massime non simultanee / *Maximum conditions (not combined)*

Profilo *Profile*	Ns Rif. *Our Ref.*	Temperatura *Temperature* C°	Pressione *Pressure* Bar	Velocità *Speed* m/s	Materiale *Material*	TPU	POM	PTFE Bronze	NBR	TPE	Resina	PTFE Carbo.	PTFE	Sezione *Section*	Pagina *Page*
	RPS	-35 +100	< 400	< 0,5	TPU	●								Idraulica *Hydraulic*	52
	PSA	-35 +100	< 400	< 0,5	TPU	●								Idraulica *Hydraulic*	58
	PAE	-35 +100	< 500	< 0,5	TPU POM	●	○							Idraulica *Hydraulic*	62
	PSH+RR	-35 +100	< 400	< 0,5	TPU POM	●	○							Idraulica *Hydraulic*	64
	PSO	-30 +100	<250 < 500 materiali standard standard materials	< 0,5	TPU NBR	●			●					Idraulica *Hydraulic*	66
	PSQ	-30 +100	< 250 < 500 materiali alternativi alternative materials	< 0,5	TPU NBR	●			●					Idraulica *Hydraulic*	70
	TPD	-30 +120	< 600	15	PTFE bronzo/ bronze NBR			■	●					Idraulica *Hydraulic*	72
	KDSA	-30 +100	< 300	< 0,5	POM NBR TPE		○		●	●				Idraulica *Hydraulic*	74
	KDSB	-30 +100	< 300	< 0,5	POM NBR TPE		○		●	●				Idraulica *Hydraulic*	76
	KDSP	-30 +100	< 300	< 0,5	TPU POM	●	○							Idraulica *Hydraulic*	80
	KDAE	-30 +100	< 400	< 0,5	TPU TPE	●				●				Idraulica *Hydraulic*	82

ANELLI DI GUIDA / *WEAR RINGS* Condizioni massime non simultanee / *Maximum conditions (not combined)*											
Profilo *Profile*	**Ns Rif.** *Our Ref.*	**Temperatura** *Temperature* C°	**Pressione** *Pressure* Bar	**Velocità** *Speed* m/s	**Materiale** *Material*	TPU	POM	PTFE Bronzo NBR	TPE	Resina PTFE Carbo.	PTFE	**Sezione** *Section*	**Pagina** *Page*
	HIS HES	-40 +115	-	< 0,8	POM fibra di vetro grasso molibd.		○					Idraulica *Hydraulic*	**84/88**
	HG	-40 +200	-	15	PTFE bronzo/ bronze			●				Idraulica *Hydraulic*	**94/96**
	HPW I-E	-40 +130	-	< 1	Resina Fenolica					○		Idraulica *Hydraulic*	**96/98**

RASCHIATORI / *WIPERS*											
	WSL	-35 +100	-	< 1	TPU	●						Idraulica *Hydraulic*	**100**
	WSG	-35 +100	-	< 1	TPU STEEL	●						Idraulica *Hydraulic*	**104**
	R09	-30 +100	-	< 1	NBR STEEL			●				Idraulica *Hydraulic*	**106**
	WWS	-35 +100	-	< 1	TPU	●						Idraulica *Hydraulic*	**108**
	WAT	-35 +100	-	< 1	TPU	●						Idraulica *Hydraulic*	**110**
	TRD	-30 +120	-	< 15	PTFE bronzo/ bronze NBR			● ●				Idraulica *Hydraulic*	**112**
	WED	-35 +100	< 20	< 1	TPU	●						Idraulica *Hydraulic*	**114**
	WEL	-35 +100	-	< 1	TPU	●						Idraulica *Hydraulic*	**118**

Montaggio
Assembly

Avvertenze e precauzioni di montaggio nei sistemi oleodinamici

Per un ottimo funzionamento delle guarnizioni occorre che durante il montaggio non vengano tagliate o deformate in modo permanente.
Si raccomanda anche di rispettare le norme internazionali ISO sia per quanto riguarda le dimensioni degli alloggiamenti che per le tolleranze.
Per le finiture delle superfici, vedere le figure 4 e 5 sotto indicate, che riportano i valori cui attenersi.
Le finiture di sola rettifica non sono mai consigliate ma si raccomanda un'ulteriore lavorazione di lucidatura prima del montaggio.

Assembling instructions

For a correct sealing functioning it's necessary to avoid cuts or permanent deformations during the assembling process. It's also recommended to follow the ISO norms concerning housings and tolerances. Regarding the surfaces finish, take a look at the following sketches 4 and 5 indicating the values to be respected.
A further polishing operation is usually suggested before mounting, since the only grinding operation isn't recommended .

Fig. 4

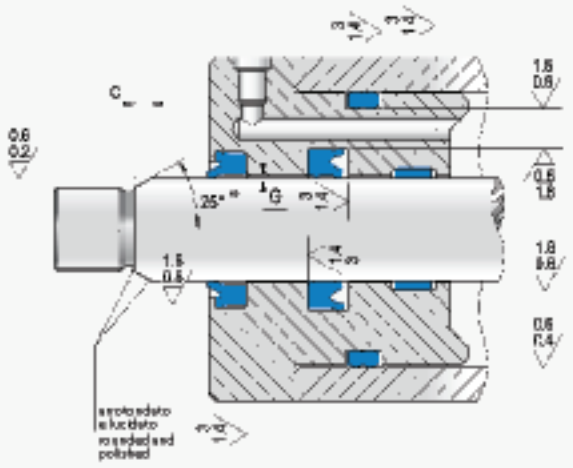

Fig. 5

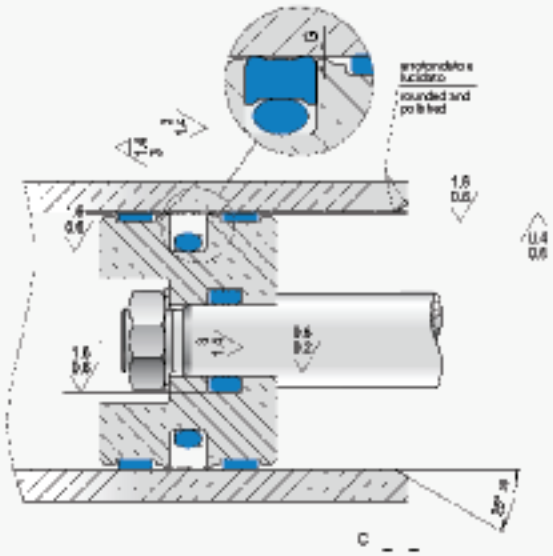

Montaggio - PTFE
Assembling - PTFE

Montaggio PTFE

Le guarnizioni PTFE necessitano di precauzioni estremamente rigorose, maggiori che per tutte le altre tipologie di tenuta. E' fondamentale eliminare gli spigoli vivi e le bave nelle sedi. Il montaggio delle guarnizioni per stelo segue normalmente questa sequenza:
- installare O-Ring nella sede (Fig.6);
- deformare l'anello in PTFE (come in Fig.7) senza creare piegature ad angolo vivo;
- inserire l'anello nella sede cercando di ridargli la formazione iniziale (Fig.8)
- calibrare con utensile conico in materiale Plastico (Fig.9)

Assembling instructions PTFE

PTFE seals require careful assembling operations in comparison to other types of seals It is necessary to remove flashes and/or cutting edges in the grooves.
The rod seal is usually assembled in the following sequence:
- fit the O-Ring into the groove (Fig.6);
- twist the PTFE ring (as shown in Fig.7), without causing any open edge curl;
- insert the ring into the groove restoring the original shape (Fig.8)
- calibrate with a plastic conical tool (Fig.9)

Fig. 6

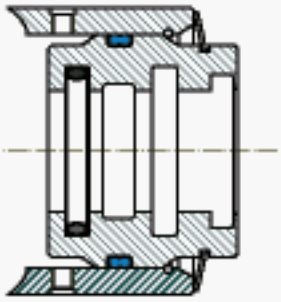

Fig. 7

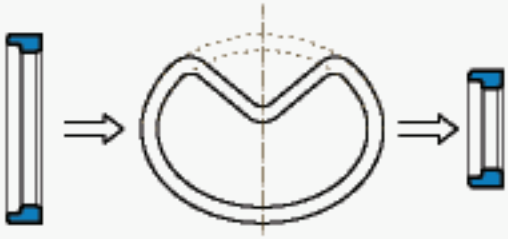

Fig. 8

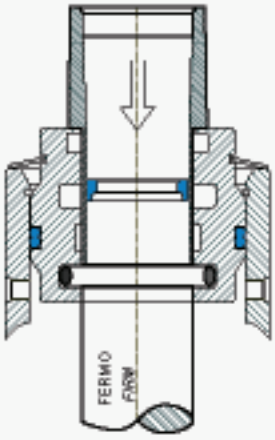

Fig. 9

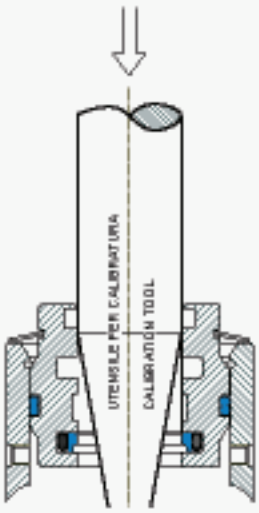



RSA

TENUTA STELO TIPO RSA

Descrizione

La guarnizione tipo RSA, progettata con labbro dinamico più corto rispetto a quello statico, ha impieghi dove risultano elevati i disallineamenti dello stelo e dove le pressioni possono raggiungere valori elevati.

Dati tecnici

Pressione: < 400 bar a temperatura di 60° C
Velocità: < 0.5 m/s
Temperatura: da – 35° C a + 100° C con punte fino a 110° C
Fluidi: fluidi idraulici a base minerale (vedi tabella 1 a pagina 12)

Materiale

Il materiale proposto è il poliuretano tipo C0 ad alto modulo elastico, basso compression-set ed elevata resistenza all'abrasione.
Ha un durezza di 93 Shore A ± 2.
Codice materiale: C0

Montaggio

Per evitare che la guarnizione si danneggi occorre eliminare le bave e gli spigoli taglienti presenthella sede e sullo stelo.
E' sempre consigliato lubrificare la tenuta prima del montaggio per agevolare l'inserimento dello stelo.

Per ulteriori informazioni leggere le istruzioni di montaggio a pag. 26.

RSA TYPE ROD SEAL

Description

The RSA seal has a dynamic lip shorter than the static one and it is used in cases of high rod misalignments and possible high pressure.

Technical data

Pressure: < 400 bar, at a temperature of 60° C
Speed: < 0.5 m/s
Temperature: from – 35° C to + 100° C, with peaks up to 110° C
Fluids: mineral hydraulic fluids (see table 1, page 12)

Material

The proposed material is a "C0" type polyurethane, with high elasticity modulus, low compression-set and high abrasion resistance.
The hardness is 93 Shore A ± 2.
Compound reference: C0

Assembling

To prevent any damage to the seal, remove any flash and cutting edges in the housing and on the rod.
The seal should always be lubricated before assembling in order to have easier insertion of the rod.

For further information please refer to the installation instructions on page 26.

RSA



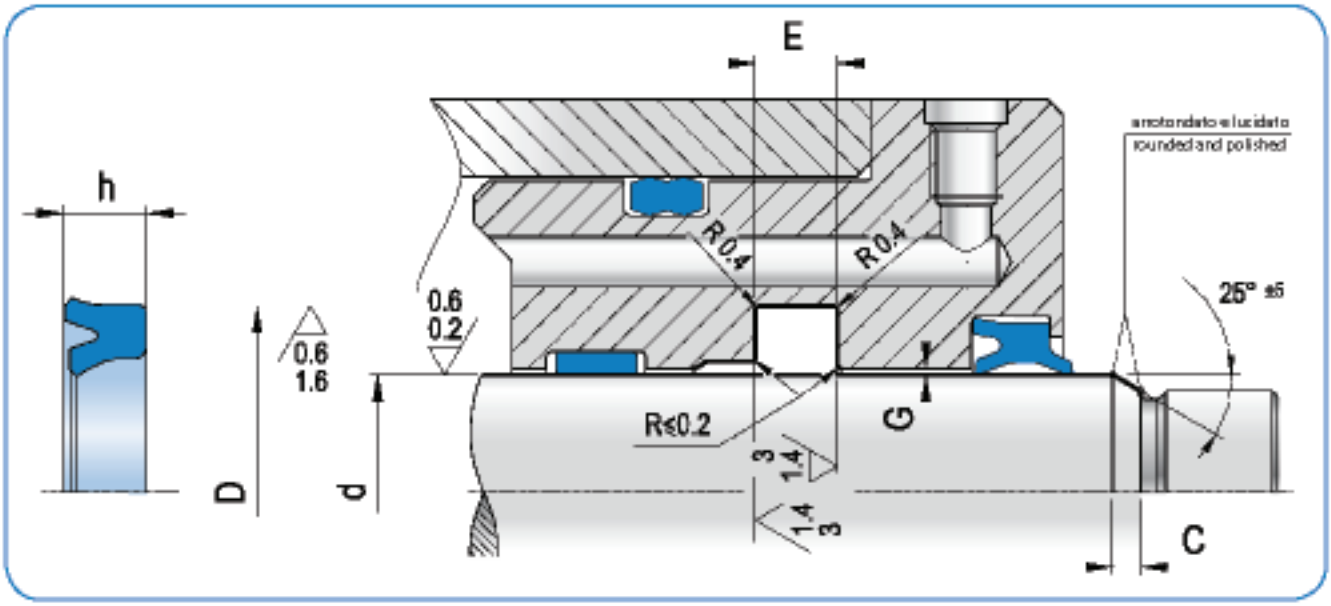

	d_{h9}	D_{H10}	h	$E_{+0,2}$	C	ART / *ITEM*
*	6,0	14,0	5,7	6,3	3,5	RSA 0060 0140 057 C0
	8,0	16,0	4,7	5,3	3,5	RSA 0080 0160 047 C0
*	8,0	16,0	5,7	6,3	3,5	RSA 0080 0160 057 C0
	8,0	18,0	8,0	9,0	3,5	RSA 0080 0180 080 C0
*	10,0	18,0	5,7	6,3	3,5	RSA 0100 0180 057 C0
	10,0	20,0	7,2	8,0	4,5	RSA 0100 0200 072 C0
*	12,0	20,0	5,0	5,5	3,5	RSA 0120 0200 050 C0
*	12,0	20,0	5,7	6,4	3,5	RSA 0120 0200 057 C0
	12,0	22,0	4,7	5,3	4,5	RSA 0120 0220 047 C0
*	12,0	22,0	7,2	8,0	4,5	RSA 0120 0220 072 C0
*	14,0	22,0	5,7	6,3	3,5	RSA 0140 0220 057 C0
*	14,0	24,0	7,2	8,0	4,5	RSA 0140 0240 072 C0
	15,0	23,0	5,7	6,3	3,5	RSA 0150 0230 057 C0
	15,0	25,0	8,0	9,0	4,5	RSA 0150 0250 080 C0
	16,0	20,6	3,3	3,6	3,5	RSA 0160 0206 033 C0
*	16,0	24,0	5,7	6,3	3,5	RSA 0160 0240 057 C0
*	16,0	26,0	7,2	8,0	4,5	RSA 0160 0260 072 C0
	18,0	24,0	4,7	5,3	3,5	RSA 0180 0240 047 C0
*	18,0	26,0	5,7	6,3	3,5	RSA 0180 0260 057 C0
	18,0	26,0	8,0	9,0	3,5	RSA 0180 0260 080 C0
*	18,0	28,0	7,2	8,0	4,5	RSA 0180 0280 072 C0
	18,0	28,0	8,0	9,0	4,5	RSA 0180 0280 080 C0
	20,0	26,0	5,0	5,5	3,5	RSA 0200 0260 050 C0
*	20,0	28,0	5,7	6,3	3,5	RSA 0200 0280 057 C0
	20,0	28,0	6,2	7,0	3,5	RSA 0200 0280 062 C0
	20,0	28,0	7,2	8,0	3,5	RSA 0200 0280 072 C0
*	20,0	30,0	7,2	8,0	4,5	RSA 0200 0300 072 C0

	d_{h9}	D_{H10}	h	$E_{+0,2}$	C	ART / *ITEM*
	20,0	30,0	8,0	9,0	4,5	RSA 0200 0300 080 C0
	20,0	35,0	10,0	11,0	5,5	RSA 0200 0350 100 C0
*	22,0	30,0	5,7	6,4	3,5	RSA 0220 0300 057 C0
	22,0	30,0	8,0	9,0	3,5	RSA 0220 0300 080 C0
	22,0	32,0	7,2	8,0	4,5	RSA 0220 0320 072 C0
*	22,0	32,0	9,0	10,0	4,5	RSA 0220 0320 090 C0
	24,0	34,0	7,2	8,0	4,5	RSA 0240 0340 072 C0
	25,0	33,0	5,7	6,3	3,5	RSA 0250 0330 057 C0
*	25,0	33,0	6,3	7,0	3,5	RSA 0250 0330 063 C0
	25,0	33,0	7,2	8,0	3,5	RSA 0250 0330 072 C0
	25,0	33,0	10,0	11,0	3,5	RSA 0250 0330 010 C0
*	25,0	35,0	7,2	8,0	4,5	RSA 0250 0350 072 C0
	25,0	38,0	9,0	10,0	5,0	RSA 0250 0380 090 C0
	25,0	40,0	10,0	11,0	5,5	RSA 0250 0400 100 C0
	28,0	36,0	5,7	6,3	3,5	RSA 0280 0360 057 C0
*	28,0	38,0	7,2	8,0	4,5	RSA 0280 0380 072 C0
	28,0	38,0	8,0	9,0	4,5	RSA 0280 0380 080 C0
	28,0	38,0	10,0	11,0	4,5	RSA 0280 0380 100 C0
	28,0	40,0	8,5	9,5	4,5	RSA 0280 0400 085 C0
*	28,0	43,0	11,5	12,5	5,5	RSA 0280 0430 115 C0
	30,0	38,0	5,7	6,3	3,5	RSA 0300 0380 057 C0
	30,0	38,0	8,0	9,0	3,5	RSA 0300 0380 080 C0
	30,0	40,0	5,7	6,3	4,5	RSA 0300 0400 057 C0
	30,0	40,0	7,2	8,0	4,5	RSA 0300 0400 072 C0
	30,0	40,0	9,5	10,5	4,5	RSA 0300 0400 095 C0
	30,0	40,0	10,0	11,0	4,5	RSA 0300 0400 100 C0
	30,0	43,0	9,0	10,0	4,5	RSA 0300 0430 090 C0

* in conformità alle norme ISO/DIN 5597 e ISO 5597/1 – *in accordance with norms ISO/DIN 5597 and ISO 5597/1*



RSA

	d_{h9}	D_{H10}	h	$E_{+0,2}$	C	ART / *ITEM*
	30,0	45,0	8,0	9,0	5,5	RSA 0300 0450 080 C0
	32,0	40,0	5,7	6,3	3,5	RSA 0320 0400 057 C0
	32,0	40,0	8,0	9,0	3,5	RSA 0320 0400 080 C0
*	32,0	42,0	7,2	8,0	4,5	RSA 0320 0420 072 C0
	32,0	42,0	10,0	11,0	4,5	RSA 0320 0420 100 C0
	32,0	45,0	10,0	11,0	4,5	RSA 0320 0450 100 C0
	32,0	47,0	10,0	11,0	5,5	RSA 0320 0470 100 C0
	33,0	43,0	10,0	11,0	4,5	RSA 0330 0430 100 C0
	35,0	43,0	5,7	6,3	3,5	RSA 0350 0430 057 C0
	35,0	43,0	8,0	9,0	3,5	RSA 0350 0430 080 C0
	35,0	45,0	7,2	8,0	4,5	RSA 0350 0450 072 C0
	35,0	45,0	10,0	11,0	4,5	RSA 0350 0450 100 C0
	35,0	46,0	8,0	9,0	4,5	RSA 0350 0460 080 C0
	35,0	47,0	8,0	9,0	4,5	RSA 0350 0470 080 C0
	35,0	50,0	10,0	11,0	5,5	RSA 0350 0500 100 C0
	36,0	44,0	5,0	5,5	3,5	RSA 0360 0440 050 C0
	36,0	44,0	5,7	6,4	3,5	RSA 0360 0440 057 C0
	36,0	44,0	8,0	9,0	3,5	RSA 0360 0440 080 C0
*	36,0	46,0	7,2	8,0	4,5	RSA 0360 0460 072 C0
	36,0	46,0	10,0	11,0	4,5	RSA 0360 0460 100 C0
	36,0	48,0	7,0	8,0	4,5	RSA 0360 0480 070 C0
	36,0	48,0	8,0	9,0	4,5	RSA 0360 0480 080 C0
	36,0	51,0	10,0	11,0	5,5	RSA 0360 0510 100 C0
*	36,0	51,0	11,5	12,5	5,5	RSA 0360 0510 115 C0
	38,0	44,5	4,7	5,3	3,5	RSA 0380 0445 047 C0
	38,0	45,0	6,2	7,0	3,5	RSA 0380 0450 062 C0
	40,0	48,0	5,7	6,3	4,0	RSA 0400 0480 057 C0
	40,0	48,0	8,0	9,0	4,0	RSA 0400 0480 080 C0
*	40,0	50,0	7,2	8,0	4,5	RSA 0400 0500 072 C0
	40,0	50,0	9,0	10,0	4,5	RSA 0400 0500 090 C0
*	40,0	50,0	10,0	11,0	4,5	RSA 0400 0500 100 C0
	40,0	52,0	8,0	9,0	4,5	RSA 0400 0520 080 C0
	40,0	55,0	10,0	11,0	5,5	RSA 0400 0550 100 C0
*	40,0	55,0	11,5	12,5	5,5	RSA 0400 0550 115 C0
	40,0	60,0	12,0	13,0	6,0	RSA 0400 0600 120 C0
	45,0	53,0	5,7	6,3	4,0	RSA 0450 0530 057 C0
	45,0	53,0	10,0	11,0	4,0	RSA 0450 0530 100 C0
*	45,0	55,0	7,2	8,0	4,5	RSA 0450 0550 072 C0
	45,0	55,0	10,0	11,0	4,5	RSA 0450 0550 100 C0
	45,0	58,0	9,0	10,0	5,0	RSA 0450 0580 090 C0
	45,0	60,0	10,0	11,0	5,5	RSA 0450 0600 100 C0
*	45,0	60,0	11,5	12,5	5,5	RSA 0450 0600 115 C0
	45,0	65,0	12,0	13,0	5,5	RSA 0450 0650 120 C0
*	50,0	60,0	7,2	8,0	4,5	RSA 0500 0600 072 C0
	50,0	60,0	10,0	11,0	4,5	RSA 0500 0600 100 C0

	d_{h9}	D_{H10}	h	$E_{+0,2}$	C	ART / *ITEM*
	50,0	60,0	12,0	13,0	4,5	RSA 0500 0600 120 C0
	50,0	62,0	9,0	10,0	5,0	RSA 0500 0620 090 C0
	50,0	63,0	10,0	11,0	5,0	RSA 0500 0630 100 C0
	50,0	65,0	10,0	11,0	5,5	RSA 0500 0650 100 C0
*	50,0	65,0	11,5	12,5	5,5	RSA 0500 0650 115 C0
	50,0	70,0	12,0	13,0	6,5	RSA 0500 0700 120 C0
	52,0	62,0	10,0	11,0	4,5	RSA 0520 0620 100 C0
	55,0	63,0	12,0	13,0	3,5	RSA 0550 0630 120 C0
	55,0	65,0	7,2	8,0	4,5	RSA 0550 0650 072 C0
	55,0	65,0	10,0	11,0	4,5	RSA 0550 0650 100 C0
	55,0	68,0	10,0	11,0	5,0	RSA 0550 0680 100 C0
	55,0	70,0	10,0	11,0	5,5	RSA 0550 0700 100 C0
	55,0	75,0	12,0	13,0	6,5	RSA 0550 0750 120 C0
	56,0	66,0	10,0	11,0	5,0	RSA 0560 0660 100 C0
	56,0	71,0	10,0	11,0	6,0	RSA 0560 0710 100 C0
*	56,0	71,0	11,5	12,5	6,0	RSA 0560 0710 115 C0
	56,0	71,0	12,5	13,5	6,0	RSA 0560 0710 125 C0
	56,0	76,0	12,0	13,0	6,5	RSA 0560 0760 120 C0
	56,0	76,0	15,0	16,0	6,5	RSA 0560 0760 150 C0
	60,0	68,0	12,5	13,5	4,5	RSA 0600 0680 125 C0
	60,0	70,0	7,2	8,0	5,0	RSA 0600 0700 072 C0
	60,0	70,0	10,0	11,0	5,0	RSA 0600 0700 100 C0
	60,0	72,0	8,0	9,0	5,5	RSA 0600 0720 080 C0
	60,0	72,0	9,0	10,0	5,5	RSA 0600 0720 090 C0
	60,0	73,0	10,0	11,0	5,5	RSA 0600 0730 100 C0
	60,0	75,0	10,0	11,0	6,0	RSA 0600 0750 100 C0
	60,0	75,0	11,5	12,5	6,0	RSA 0600 0750 115 C0
	60,0	80,0	12,0	13,0	6,5	RSA 0600 0800 120 C0
	63,0	73,0	12,0	13,0	5,0	RSA 0630 0730 120 C0
	63,0	75,0	8,6	9,6	5,5	RSA 0630 0750 086 C0
	63,0	78,0	10,0	11,0	6,0	RSA 0630 0780 100 C0
*	63,0	78,0	11,5	12,5	6,0	RSA 0630 0780 115 C0
	63,0	83,0	15,0	16,0	6,5	RSA 0630 0830 150 C0
	65,0	75,0	10,0	11,0	5,0	RSA 0650 0750 100 C0
	65,0	77,0	8,6	9,6	5,5	RSA 0650 0770 086 C0
	65,0	77,0	9,0	10,0	5,5	RSA 0650 0770 090 C0
	65,0	80,0	10,0	11,0	6,0	RSA 0650 0800 100 C0
	65,0	85,0	12,0	13,0	6,5	RSA 0650 0850 120 C0
*	70,0	80,0	7,2	8,0	5,0	RSA 0700 0800 072 C0
	70,0	80,0	12,0	13,0	5,0	RSA 0700 0800 120 C0
	70,0	82,0	8,6	9,6	6,0	RSA 0700 0820 086 C0
	70,0	85,0	10,0	11,0	6,0	RSA 0700 0850 100 C0
*	70,0	85,0	11,5	12,5	6,0	RSA 0700 0850 115 C0
*	70,0	85,0	12,0	13,0	6,0	RSA 0700 0850 120 C0
*	70,0	90,0	15,0	16,0	7,0	RSA 0700 0900 150 C0

* in conformità alle norme ISO/DIN 5597 e ISO 5597/1 – *in accordance with ISO/DIN 5597 and ISO 5597/1 norms*

RSA



	d_{h9}	D_{H10}	h	$E_{+0,2}$	C	ART / *ITEM*
	75,0	85,0	7,2	8,0	7,0	RSA 0750 0850 072 C0
	75,0	87,0	8,6	9,6	6,0	RSA 0750 0870 086 C0
	75,0	90,0	12,0	13,0	6,0	RSA 0750 0900 120 C0
	75,0	95,0	12,0	13,0	7,0	RSA 0750 0950 120 C0
	80,0	90,0	7,2	8,0	5,0	RSA 0800 0900 072 C0
	80,0	90,0	10,0	11,0	5,0	RSA 0800 0900 100 C0
	80,0	90,0	12,0	13,0	5,0	RSA 0800 0900 120 C0
	80,0	92,0	8,6	9,6	5,5	RSA 0800 0920 086 C0
	80,0	95,0	10,0	11,0	6,0	RSA 0800 0950 100 C0
*	80,0	95,0	11,5	12,5	6,0	RSA 0800 0950 115 C0
	80,0	95,0	12,0	13,0	6,0	RSA 0800 0950 120 C0
	80,0	100,0	12,0	13,0	7,0	RSA 0800 1000 120 C0
	80,0	100,0	12,5	13,5	7,0	RSA 0800 1000 125 C0
*	80,0	100,0	15,0	16,0	7,0	RSA 0800 1000 150 C0
	85,0	100,0	11,0	12,0	6,0	RSA 0850 1000 110 C0
	85,0	100,0	12,0	13,0	6,0	RSA 0850 1000 120 C0
	85,0	105,0	12,0	13,0	7,0	RSA 0850 1050 120 C0
	90,0	100,0	11,5	12,5	5,5	RSA 0900 1000 115 C0
*	90,0	105,0	8,5	9,5	6,0	RSA 0900 1050 085 C0
*	90,0	105,0	11,5	12,5	6,0	RSA 0900 1050 115 C0
*	90,0	105,0	12,0	13,0	6,0	RSA 0900 1050 120 C0
	90,0	110,0	12,0	13,0	7,0	RSA 0900 1100 120 C0
*	90,0	110,0	15,0	16,0	7,0	RSA 0900 1100 150 C0
	95,0	110,0	12,0	13,0	6,0	RSA 0950 1100 120 C0
	95,0	115,0	12,0	13,0	7,0	RSA 0950 1150 120 C0
	100,0	115,0	12,0	13,0	6,0	RSA 1000 1150 120 C0
*	100,0	120,0	12,0	13,0	7,0	RSA 1000 1200 120 C0
*	100,0	120,0	15,0	16,0	7,0	RSA 1000 1200 150 C0
*	100,0	125,0	19,0	20,0	8,0	RSA 1000 1250 190 C0
	105,0	120,0	11,5	12,5	6,0	RSA 1050 1200 115 C0

	d_{h9}	D_{H10}	h	$E_{+0,2}$	C	ART / *ITEM*
	105,0	125,0	12,0	13,0	7,0	RSA 1050 1250 120 C0
	105,0	125,0	15,0	16,0	7,0	RSA 1050 1250 150 C0
	110,0	125,0	11,0	12,0	6,0	RSA 1100 1250 110 C0
	110,0	130,0	12,0	13,0	7,0	RSA 1100 1300 120 C0
*	110,0	130,0	15,0	16,0	7,0	RSA 1100 1300 150 C0
	115,0	135,0	12,0	13,0	7,0	RSA 1150 1350 120 C0
	120,0	135,0	11,5	12,5	6,0	RSA 1200 1350 115 C0
	120,0	140,0	12,0	13,0	7,0	RSA 1200 1400 120 C0
	120,0	140,0	15,0	16,0	7,0	RSA 1200 1400 150 C0
*	125,0	145,0	15,0	16,0	7,0	RSA 1250 1450 150 C0
	130,0	150,0	12,0	13,0	7,0	RSA 1300 1500 120 C0
	130,0	150,0	15,0	16,0	7,0	RSA 1300 1500 150 C0
*	140,0	160,0	15,0	16,0	7,0	RSA 1400 1600 150 C0
	150,0	170,0	15,0	16,0	7,0	RSA 1500 1700 150 C0
	160,0	180,0	12,0	13,0	7,0	RSA 1600 1800 120 C0
	160,0	180,0	15,0	16,0	7,0	RSA 1600 1800 150 C0
	170,0	190,0	15,0	16,0	7,0	RSA 1700 1900 150 C0
	180,0	200,0	15,0	16,0	7,0	RSA 1800 2000 150 C0
	190,0	210,0	15,0	16,0	7,0	RSA 1900 2100 150 C0
	200,0	220,0	15,0	16,0	7,0	RSA 2000 2200 150 C0
	200,0	225,0	16,0	17,0	8,0	RSA 2000 2250 160 C0
	210,0	230,0	15,0	16,0	7,0	RSA 2100 2300 150 C0
	220,0	240,0	15,0	16,0	7,0	RSA 2200 2400 150 C0
	230,0	250,0	15,0	16,0	7,0	RSA 2300 2500 150 C0
	240,0	260,0	15,0	16,0	7,0	RSA 2400 2600 150 C0
	250,0	270,0	15,0	16,0	7,0	RSA 2500 2700 150 C0

* In conformità alla norma ISO/DIN 5597 e ISO 5597/1 - *In accordance with ISO/DIN 5597 and ISO 5597/1 norms*

Nota: altre dimensioni non a catalogo a richiesta. Consultare il nostro ufficio tecnico.

Remark: please contact our technical dept. for further dimensions not included in the catalogue.



RSB

TENUTA STELO TIPO RSB

Descrizione

La guarnizione tipo RSB è molto simile al tipo RSA, ma presenta sul lato dinamico un doppio labbro che ha più di una funzione:

- attenua eventuali fenomeni di stick-slip grazie al fluido trattenuto nell'intercapedine fra i due labbri;
- evita alle impurità di entrare dall'esterno;
- contrasta il ritiro del materiale alle basse temperature;
- funge da stabilizzatore.

Dati tecnici

Pressione: < 400 bar a temperatura di 60° C
Velocità: < 0.5 m/s
Temperatura: da - 35° C a + 100° C con punte fino a 110° C
Fluidi: fluidi idraulici a base minerale (vedi tabella 1 a pagina 12)

Materiale

Il materiale proposto è il poliuretano tipo C0 ad alto modulo elastico, basso compression-set ed elevata resistenza all'abrasione.
Ha un durezza di 93 Shore A ± 2.
Codice materiale: C0

Montaggio

Per evitare che la guarnizione si danneggi occorre eliminare le bave e gli spigoli taglienti presenti nella sede e sullo stelo.
E' sempre consigliato lubrificare la tenuta prima del montaggio per agevolare l'inserimento dello stelo.
Per ulteriori informazioni leggere le istruzioni di montaggio a pag. 26.

RSB TYPE ROD SEAL

Description

The RSB seal type is similar to the RSA type, but on the dynamic side, it presents a multifunctional double lip which:

- *reduces stick-slip effects thanks because it keeps oil between the secondary lip and the main one;*
- *stops any external impurities;*
- *faces the material shrinkage at low temperatures;*
- *acts as a stabilizer.*

Technical data

Pressure: *< 400 bar at a temperature of 60° C*
Speed: *< 0.5 m/s*
Temperature: *from - 35° C to + 100° C with peaks to 110° C*
Fluids: *mineral hydraulic fluids (see table 1, page 12)*

Material

The proposed material is a "C0" type polyurethane, with high elasticity modulus, low compression-set and high abrasion resistance.
The hardness is 93 Shore A ± 2.
Compound reference: C0

Assembling

To prevent any damage to the seal, remove any flash and cutting edges in the housing and on the rod.
The seal should always be lubricated before assembling in order to have easier insertion of the rod.
For further information please refer to the installation instructions on page 26.



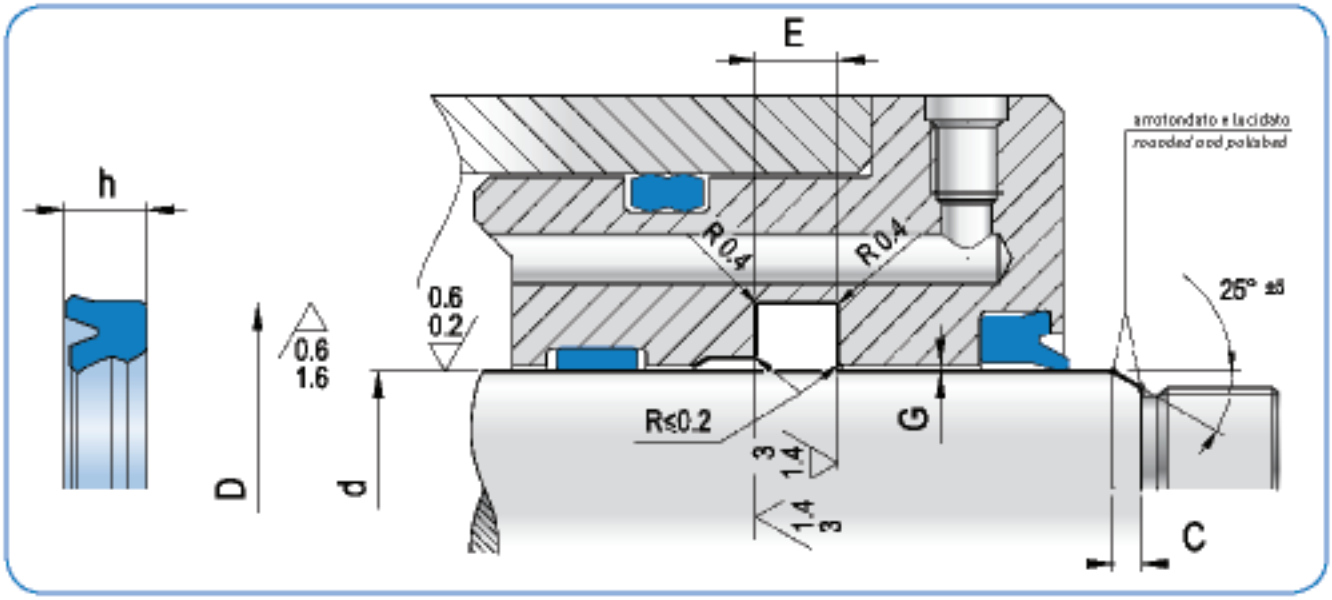

d_{hp}	D_{H10}	h	$E_{+0,2}$	C	ART / *ITEM*
6,0	14,0	5,7	6,3	3,5	RSB 0060 0140 057 C0
8,0	16,0	5,7	6,3	3,5	RSB 0080 0160 057 C0
10,0	18,0	5,7	6,3	3,5	RSB 0100 0180 057 C0
10,0	20,0	7,0	8,0	4,5	RSB 0100 0200 070 C0
12,0	19,0	5,0	5,6	3,5	RSB 0120 0190 050 C0
12,0	20,0	5,7	6,3	4,0	RSB 0120 0200 057 C0
12,0	22,0	7,0	8,0	4,5	RSB 0120 0220 070 C0
12,0	22,0	8,0	9,0	4,5	RSB 0120 0220 080 C0
14,0	20,0	5,8	6,3	4,0	RSB 0140 0200 058 C0
14,0	21,0	5,0	5,6	4,0	RSB 0140 0210 050 C0
14,0	22,0	5,7	6,3	4,0	RSB 0140 0220 057 C0
14,0	24,0	7,3	8,0	4,5	RSB 0140 0240 073 C0
15,0	23,0	5,7	6,3	4,0	RSB 0150 0230 057 C0
16,0	24,0	5,7	6,3	4,0	RSB 0160 0240 057 C0
16,0	26,0	7,3	8,0	4,5	RSB 0160 0260 073 C0
18,0	25,0	5,0	5,6	3,5	RSB 0180 0250 050 C0
18,0	26,0	5,7	6,3	4,0	RSB 0180 0260 057 C0
18,0	28,0	7,3	8,0	4,5	RSB 0180 0280 073 C0
20,0	28,0	4,3	5,0	4,0	RSB 0200 0280 043 C0
20,0	28,0	5,7	6,3	4,0	RSB 0200 0280 057 C0
20,0	30,0	7,3	8,0	4,5	RSB 0200 0300 073 C0
22,0	29,0	5,0	5,6	3,5	RSB 0220 0290 050 C0
22,0	30,0	5,5	6,0	4,5	RSB 0220 0300 055 C0
22,0	32,0	7,3	8,0	4,5	RSB 0220 0320 073 C0
25,0	33,0	5,7	6,3	4,0	RSB 0250 0330 057 C0
25,0	33,0	7,3	8,0	4,0	RSB 0250 0330 073 C0
25,0	35,0	7,3	8,0	4,5	RSB 0250 0350 073 C0
28,0	36,0	5,7	6,3	4,0	RSB 0280 0360 057 C0
28,0	36,0	7,3	8,0	4,0	RSB 0280 0360 073 C0
28,0	38,0	5,7	6,3	4,5	RSB 0280 0380 057 C0

d_{hg}	D_{H10}	h	$E_{+0,2}$	C	ART / *ITEM*
28,0	38,0	7,3	8,0	4,5	RSB 0280 0380 073 C0
28,0	38,0	8,0	9,0	4,5	RSB 0280 0380 080 C0
28,0	43,0	11,5	12,5	5,0	RSB 0280 0430 115 C0
30,0	38,0	5,7	6,3	4,0	RSB 0300 0380 057 C0
30,0	40,0	6,0	7,0	4,5	RSB 0300 0400 060 C0
30,0	40,0	7,3	8,0	4,5	RSB 0300 0400 073 C0
30,0	40,0	8,0	9,0	4,5	RSB 0300 0400 080 C0
32,0	40,0	5,7	6,3	4,0	RSB 0320 0400 057 C0
32,0	40,0	6,0	7,0	4,0	RSB 0320 0400 060 C0
32,0	40,0	6,7	7,7	4,0	RSB 0320 0400 067 C0
32,0	42,0	5,7	6,3	4,5	RSB 0320 0420 057 C0
32,0	42,0	7,3	8,0	4,5	RSB 0320 0420 073 C0
35,0	42,0	7,0	8,0	4,0	RSB 0350 0420 070 C0
35,0	43,0	5,7	6,3	4,0	RSB 0350 0430 057 C0
35,0	43,0	6,0	7,0	5,0	RSB 0350 0430 060 C0
35,0	45,0	6,0	7,0	5,0	RSB 0350 0450 060 C0
35,0	45,0	6,7	7,7	5,0	RSB 0350 0450 067 C0
35,0	45,0	7,0	8,0	5,0	RSB 0350 0450 070 C0
35,0	45,0	7,3	8,0	5,0	RSB 0350 0450 073 C0
35,0	45,0	12,0	13,0	5,0	RSB 0350 0450 120 C0
35,0	50,0	9,0	10,0	5,5	RSB 0350 0500 090 C0
36,0	44,0	5,7	6,3	4,5	RSB 0360 0440 057 C0
36,0	44,0	6,3	7,0	4,5	RSB 0360 0440 063 C0
36,0	46,0	7,0	8,0	5,0	RSB 0360 0460 070 C0
36,0	46,0	7,3	8,0	5,0	RSB 0360 0460 073 C0
36,0	46,0	8,0	9,0	5,0	RSB 0360 0460 080 C0
38,0	48,0	8,0	9,0	5,0	RSB 0380 0480 080 C0
40,0	48,0	5,7	6,3	4,5	RSB 0400 0480 057 C0
40,0	50,0	6,0	7,0	4,5	RSB 0400 0500 060 C0
40,0	50,0	7,0	8,0	5,0	RSB 0400 0500 070 C0



RSB

d_{h9}	D_{H10}	h	$E_{+0,2}$	C	ART / *ITEM*
40,0	50,0	7,3	8,0	5,0	RSB 0400 0500 073 C0
40,0	50,0	10,0	11,0	5,0	RSB 0400 0500 100 C0
40,0	55,0	10,0	11,0	5,5	RSB 0400 0550 100 C0
40,0	55,0	11,5	12,5	5,5	RSB 0400 0550 115 C0
40,0	55,0	9,0	10,0	5,5	RSB 0400 0550 090 C0
42,0	50,0	8,0	9,0	4,5	RSB 0420 0500 080 C0
42,0	50,0	11,5	12,5	4,5	RSB 0420 0500 115 C0
42,0	53,0	9,0	10,0	5,0	RSB 0420 0530 090 C0
45,0	53,0	5,7	6,3	4,5	RSB 0450 0530 057 C0
45,0	53,0	10,0	11,0	4,5	RSB 0450 0530 100 C0
45,0	53,0	11,5	12,5	4,5	RSB 0450 0530 115 C0
45,0	55,0	5,7	6,3	5,0	RSB 0450 0550 057 C0
45,0	55,0	6,0	7,0	4,5	RSB 0450 0550 060 C0
45,0	55,0	7,3	8,0	5,0	RSB 0450 0550 073 C0
45,0	55,0	11,5	12,5	5,0	RSB 0450 0550 115 C0
45,0	60,0	11,5	12,5	5,5	RSB 0450 0600 115 C0
46,0	56,0	10,0	11,0	5,0	RSB 0460 0560 100 C0
48,0	56,0	11,5	12,5	4,5	RSB 0480 0560 115 C0
48,0	56,0	12,0	13,0	4,5	RSB 0480 0560 120 C0
50,0	57,0	7,3	8,0	4,5	RSB 0500 0570 073 C0
50,0	57,0	10,0	11,0	4,5	RSB 0500 0570 100 C0
50,0	58,0	11,5	12,5	4,5	RSB 0500 0580 115 C0
50,0	59,0	10,0	11,0	5,0	RSB 0500 0590 100 C0
50,0	60,0	6,0	7,0	4,5	RSB 0500 0600 060 C0
50,0	60,0	7,3	8,0	5,0	RSB 0500 0600 073 C0
50,0	60,0	10,0	11,0	5,0	RSB 0500 0600 100 C0
50,0	65,0	9,0	10,0	5,5	RSB 0500 0650 090 C0
50,0	65,0	10,0	11,0	5,5	RSB 0500 0650 100 C0
50,0	65,0	11,5	12,5	5,5	RSB 0500 0650 115 C0
50,0	70,0	10,0	11,0	6,0	RSB 0500 0700 100 C0
50,0	70,0	12,0	13,0	7,0	RSB 0500 0700 120 C0
55,0	63,0	11,5	12,5	4,5	RSB 0550 0630 115 C0
55,0	65,0	6,0	7,0	4,5	RSB 0550 0650 060 C0
55,0	65,0	7,3	8,0	5,0	RSB 0550 0650 073 C0
55,0	65,0	8,5	9,5	5,0	RSB 0550 0650 085 C0
55,0	65,0	10,0	11,0	5,0	RSB 0550 0650 100 C0
55,0	68,0	10,0	11,0	5,0	RSB 0550 0680 100 C0
55,0	70,0	9,0	10,0	5,5	RSB 0550 0700 090 C0
55,0	75,0	12,0	13,0	5,0	RSB 0550 0750 120 C0
56,0	66,0	6,0	7,0	5,0	RSB 0560 0660 060 C0
56,0	71,0	9,0	10,0	5,5	RSB 0560 0710 090 C0
56,0	71,0	10,0	11,0	5,5	RSB 0560 0710 100 C0
56,0	71,0	11,5	12,5	5,5	RSB 0560 0710 115 C0
56,0	76,0	15,0	16,0	6,0	RSB 0560 0760 150 C0
60,0	68,0	11,5	12,5	4,5	RSB 0600 0680 115 C0
60,0	70,0	6,0	7,0	5,0	RSB 0600 0700 060 C0
60,0	70,0	7,3	8,0	5,0	RSB 0600 0700 073 C0
60,0	70,0	10,0	11,0	5,0	RSB 0600 0700 100 C0

d_{h9}	D_{H10}	h	$E_{+0,2}$	C	ART / *ITEM*
60,0	70,0	11,5	12,5	5,0	RSB 0600 0700 115 C0
60,0	73,0	10,0	11,0	5,5	RSB 0600 0730 100 C0
60,0	75,0	9,0	10,0	5,5	RSB 0600 0750 090 C0
60,0	75,0	10,0	11,0	5,5	RSB 0600 0750 100 C0
60,0	75,0	11,5	12,5	5,5	RSB 0600 0750 115 C0
60,0	80,0	12,0	13,0	7,0	RSB 0600 0800 120 C0
63,0	73,0	6,0	7,0	5,0	RSB 0630 0730 060 C0
63,0	78,0	10,0	11,0	5,5	RSB 0630 0780 100 C0
63,0	78,0	11,5	12,5	5,5	RSB 0630 0780 115 C0
63,0	83,0	12,0	13,0	7,0	RSB 0630 0830 120 C0
63,0	83,0	15,0	16,0	7,0	RSB 0630 0830 150 C0
65,0	73,0	11,5	12,5	4,5	RSB 0650 0730 115 C0
65,0	75,0	6,0	7,0	5,0	RSB 0650 0750 060 C0
65,0	75,0	7,0	8,0	5,5	RSB 0650 0750 070 C0
65,0	75,0	7,3	8,0	5,0	RSB 0650 0750 073 C0
65,0	75,0	10,0	11,0	5,0	RSB 0650 0750 100 C0
65,0	75,0	12,0	13,0	5,5	RSB 0650 0750 120 C0
65,0	78,0	10,0	11,0	5,5	RSB 0650 0780 100 C0
65,0	80,0	9,0	10,0	5,5	RSB 0650 0800 090 C0
65,0	80,0	11,5	12,5	5,5	RSB 0650 0800 115 C0
65,0	85,0	12,0	13,0	7,0	RSB 0650 0850 120 C0
67,0	75,0	11,5	12,5	5,0	RSB 0670 0750 115 C0
67,0	77,0	6,0	7,0	5,0	RSB 0670 0770 060 C0
70,0	78,0	11,5	12,5	4,5	RSB 0700 0780 115 C0
70,0	80,0	6,0	7,0	5,0	RSB 0700 0800 060 C0
70,0	80,0	7,3	8,0	5,5	RSB 0700 0800 073 C0
70,0	80,0	11,5	12,5	5,0	RSB 0700 0800 115 C0
70,0	83,0	10,0	11,0	5,5	RSB 0700 0830 100 C0
70,0	85,0	9,0	10,0	5,5	RSB 0700 0850 090 C0
70,0	85,0	10,0	11,0	5,5	RSB 0700 0850 100 C0
70,0	85,0	11,5	12,5	6,0	RSB 0700 0850 115 C0
70,0	90,0	12,0	13,0	7,0	RSB 0700 0900 120 C0
70,0	90,0	15,0	16,0	7,0	RSB 0700 0900 150 C0
71,0	81,0	6,0	11,0	5,0	RSB 0710 0810 060 C0
71,0	81,0	8,0	9,0	5,0	RSB 0710 0810 080 C0
75,0	83,0	7,0	8,0	5,0	RSB 0750 0830 070 C0
75,0	83,0	11,5	12,5	5,0	RSB 0750 0830 115 C0
75,0	85,0	6,0	7,0	5,5	RSB 0750 0850 060 C0
75,0	85,0	10,0	11,0	5,5	RSB 0750 0850 100 C0
75,0	85,0	11,5	12,5	5,5	RSB 0750 0850 115 C0
75,0	88,0	10,0	11,0	5,5	RSB 0750 0880 100 C0
75,0	90,0	9,0	10,0	5,5	RSB 0750 0900 090 C0
75,0	90,0	11,5	12,5	6,0	RSB 0750 0900 115 C0
75,0	95,0	12,0	13,0	7,0	RSB 0750 0950 120 C0
78,0	86,0	11,5	12,5	5,0	RSB 0780 0860 115 C0
80,0	88,0	11,5	12,5	5,0	RSB 0800 0880 115 C0
80,0	90,0	6,0	7,0	5,5	RSB 0800 0900 060 C0
80,0	90,0	7,3	8,0	5,5	RSB 0800 0900 073 C0

RSB



d_{h9}	D_{H10}	h	$E_{+0,2}$	C	ART / *ITEM*
80,0	90,0	10,0	11,0	5,5	RSB 0800 0900 100 C0
80,0	93,0	10,0	11,0	5,5	RSB 0800 0930 100 C0
80,0	95,0	9,0	10,0	6,0	RSB 0800 0950 090 C0
80,0	95,0	10,0	11,0	6,0	RSB 0800 0950 100 C0
80,0	95,0	11,5	12,5	6,0	RSB 0800 0950 115 C0
80,0	100,0	12,0	13,0	7,0	RSB 0800 1000 120 C0
80,0	100,0	15,0	16,0	7,0	RSB 0800 1000 150 C0
85,0	93,0	11,5	12,5	5,0	RSB 0850 0930 115 C0
85,0	100,0	9,0	10,0	6,0	RSB 0850 1000 090 C0
85,0	100,0	10,0	11,0	6,0	RSB 0850 1000 100 C0
85,0	100,0	11,5	12,5	6,0	RSB 0850 1000 115 C0
85,0	105,0	12,0	13,0	7,0	RSB 0850 1050 120 C0
90,0	98,0	11,5	12,5	5,0	RSB 0900 0980 115 C0
90,0	100,0	7,3	8,0	5,5	RSB 0900 1000 073 C0
90,0	100,0	11,5	12,5	5,5	RSB 0900 1000 115 C0
90,0	105,0	9,0	10,0	6,0	RSB 0900 1050 090 C0
90,0	105,0	10,0	11,0	6,0	RSB 0900 1050 100 C0
90,0	105,0	11,5	12,5	6,0	RSB 0900 1050 115 C0
90,0	110,0	12,0	13,0	7,0	RSB 0900 1100 120 C0
90,0	110,0	15,0	16,0	7,0	RSB 0900 1100 150 C0
93,0	101,0	11,5	12,5	5,0	RSB 0930 1010 115 C0
95,0	103,0	11,5	12,5	5,0	RSB 0950 1030 115 C0
95,0	105,0	12,0	13,0	5,5	RSB 0950 1050 120 C0
95,0	110,0	9,0	10,0	7,0	RSB 0950 1100 090 C0
95,0	110,0	10,0	11,0	6,0	RSB 0950 1100 100 C0
95,0	115,0	12,0	13,0	7,0	RSB 0950 1150 120 C0
95,0	115,0	13,5	14,5	5,5	RSB 0950 1150 135 C0
97,0	105,0	11,5	12,5	5,0	RSB 0970 1050 115 C0
100,0	108,0	11,5	12,5	5,5	RSB 1000 1080 115 C0
100,0	115,0	9,0	10,0	6,0	RSB 1000 1150 090 C0
100,0	115,0	10,0	11,0	6,0	RSB 1000 1150 100 C0
100,0	120,0	11,8	13,0	7,0	RSB 1000 1200 118 C0
100,0	120,0	12,0	13,0	7,0	RSB 1000 1200 120 C0
100,0	120,0	15,0	16,0	7,0	RSB 1000 1200 150 C0
105,0	113,0	11,5	12,5	5,0	RSB 1050 1130 115 C0
105,0	115,0	11,5	12,5	5,5	RSB 1050 1150 115 C0
105,0	120,0	9,0	10,0	6,0	RSB 1050 1200 090 C0
105,0	120,0	10,0	11,0	6,0	RSB 1050 1200 100 C0
105,0	125,0	12,0	13,0	7,0	RSB 1050 1250 120 C0
106,0	121,0	9,0	10,0	6,0	RSB 1060 1210 090 C0
106,0	121,0	10,0	11,0	6,0	RSB 1060 1210 100 C0
110,0	118,0	11,5	12,5	5,0	RSB 1100 1180 115 C0
110,0	125,0	9,0	10,0	6,0	RSB 1100 1250 090 C0
110,0	125,0	9,6	10,6	6,0	RSB 1100 1250 096 C0
110,0	125,0	10,0	11,0	6,0	RSB 1100 1250 100 C0
110,0	130,0	10,0	11,0	7,0	RSB 1100 1300 100 C0
110,0	130,0	12,0	13,0	7,0	RSB 1100 1300 120 C0
110,0	130,0	15,0	16,0	7,0	RSB 1100 1300 150 C0

d_{h9}	D_{H10}	h	$E_{+0,2}$	C	ART / *ITEM*
110,0	135,0	19,0	20,0	8,0	RSB 1100 1350 190 C0
112,0	127,0	9,0	10,0	6,0	RSB 1120 1270 090 C0
112,0	127,0	10,0	11,0	6,0	RSB 1120 1270 100 C0
112,0	125,0	9,0	10,0	5,5	RSB 1120 1250 090 C0
115,0	123,0	11,5	12,5	5,0	RSB 1150 1230 115 C0
115,0	125,0	12,0	13,0	5,5	RSB 1150 1250 120 C0
115,0	130,0	9,0	10,0	6,0	RSB 1150 1300 090 C0
115,0	135,0	12,0	13,0	7,0	RSB 1150 1350 120 C0
118,0	126,0	11,5	12,5	5,0	RSB 1180 1260 115 C0
118,0	133,0	9,0	10,0	6,0	RSB 1180 1330 090 C0
118,0	133,0	10,0	11,0	6,0	RSB 1180 1330 100 C0
120,0	128,0	11,5	12,5	5,0	RSB 1200 1280 115 C0
120,0	135,0	9,0	10,0	6,0	RSB 1200 1350 090 C0
120,0	140,0	10,0	11,0	7,0	RSB 1200 1400 100 C0
120,0	140,0	12,0	13,0	7,0	RSB 1200 1400 120 C0
120,0	140,0	15,0	16,0	7,0	RSB 1200 1400 150 C0
125,0	133,0	11,5	12,5	5,0	RSB 1250 1330 115 C0
125,0	140,0	9,0	10,0	6,0	RSB 1250 1400 090 C0
125,0	145,0	12,0	13,0	7,0	RSB 1250 1450 120 C0
125,0	145,0	15,0	16,0	7,0	RSB 1250 1450 150 C0
125,0	150,0	19,0	20,0	8,0	RSB 1250 1500 190 C0
128,0	136,0	11,5	12,5	5,0	RSB 1280 1360 115 C0
130,0	145,0	9,0	10,0	6,0	RSB 1300 1450 090 C0
130,0	150,0	12,0	13,0	7,0	RSB 1300 1500 120 C0
130,0	150,0	15,0	16,0	7,0	RSB 1300 1500 150 C0
135,0	143,0	11,5	12,5	5,0	RSB 1350 1430 115 C0
140,0	148,0	11,5	12,5	5,0	RSB 1400 1480 115 C0
140,0	155,0	9,0	10,0	6,0	RSB 1400 1550 090 C0
140,0	155,0	9,6	10,6	6,0	RSB 1400 1550 096 C0
140,0	155,0	10,0	11,0	6,0	RSB 1400 1550 100 C0
140,0	160,0	15,0	16,0	7,0	RSB 1400 1600 150 C0
140,0	165,0	19,0	20,0	8,0	RSB 1400 1650 190 C0
143,0	151,0	11,5	12,5	5,0	RSB 1430 1510 115 C0
150,0	170,0	12,0	13,0	7,0	RSB 1500 1700 120 C0
150,0	170,0	15,0	16,0	7,0	RSB 1500 1700 150 C0
152,0	160,0	11,5	12,5	5,0	RSB 1520 1600 115 C0
155,0	163,0	11,5	12,5	5,0	RSB 1550 1630 115 C0
160,0	168,0	11,5	12,5	5,0	RSB 1600 1680 115 C0
170,0	180,0	12,0	13,0	5,0	RSB 1700 1800 120 C0
170,0	190,0	15,0	16,0	7,0	RSB 1700 1900 150 C0
180,0	200,0	15,0	16,0	7,0	RSB 1800 2000 150 C0
180,0	205,0	15,0	16,0	8,0	RSB 1800 2050 150 C0
200,0	225,0	15,0	16,0	8,0	RSB 2000 2250 150 C0

Nota: altre dimensioni non a catalogo a richiesta. Consultare il nostro ufficio tecnico.

Remark: please contact our technical dept. for further dimensions not included in the catalogue.



RSB2

TENUTA STELO TIPO RSB2

Descrizione

La tenuta stelo RSB2 è molto simile alla tenuta RSB con l'aggiunta di un anello antiestrusione.
Si utilizza questa tenuta quando non è possibile ridurre i giochi di accoppiamento, tra la testata dello stelo e dove esistono picchi di pressione elevata.

Dati tecnici

Pressione:	<400 bar con punte a 500 bar alla temperatura di 60°C
Velocità:	<0.5 m/s
Temperatura:	da - 35°C a +100°C con punte fino a +110°C
Fluidi :	fluidi idraulici a base minerale (vedi tabella 1 a pagina 12)

Materiale

Il materiale proposto è il poliuretano tipo C0 ad alto modulo elastico, basso compression-set ed elevata resistenza all'abrasione. Ha una durezza di 93 Shore A±2.
Per l'anello antiestrusione viene proposta una resina poliacetalica (R0) con elevata resistenza al carico di rottura
Codice materiale: CR

Montaggio

Per evitare che la guarnizione si danneggi occorre eliminare le bave e gli spigoli taglienti presenti nella sede e sullo stelo.
E' sempre consigliato lubrificare la tenuta prima del montaggio per agevolare l'inserimento dello stelo.
Per ulteriori informazioni leggere le istruzioni di montaggio a pag 26.

RSB2 TYPE ROD SEAL

Description

The RSB2 seal type is similar to the RSB type with anti-extrusion ring. This seal is recommended when the coupling clearance between the head and the rod cannot be reduced and in the event of high pressure peaks

Technical data

Pressure:	*400 bar with peaks till 500 bar At 60°C*
Speed :	*< 0.5 [m/s]*
Temperature:	*- 35 °C ÷ +100 °C with peaks till +110°C*
Fluids :	*mineral hydraulic fluids (see table 1, page 12)*

Material

The proposed material is a "C0" type polyurethane, with high elasticity modulus, low compression-set and high abrasion resistance.
The hardness is 93 Shore A ± 2.
Compound reference: C0

Assembling

To prevent any damage to the seal, remove any flash and cutting edges in the housing and on the rod.
The seal should always be lubricated before assembling in order to have easier insertion of the rod.
For further information please refer to the installation instructions on page 26.

RSB2



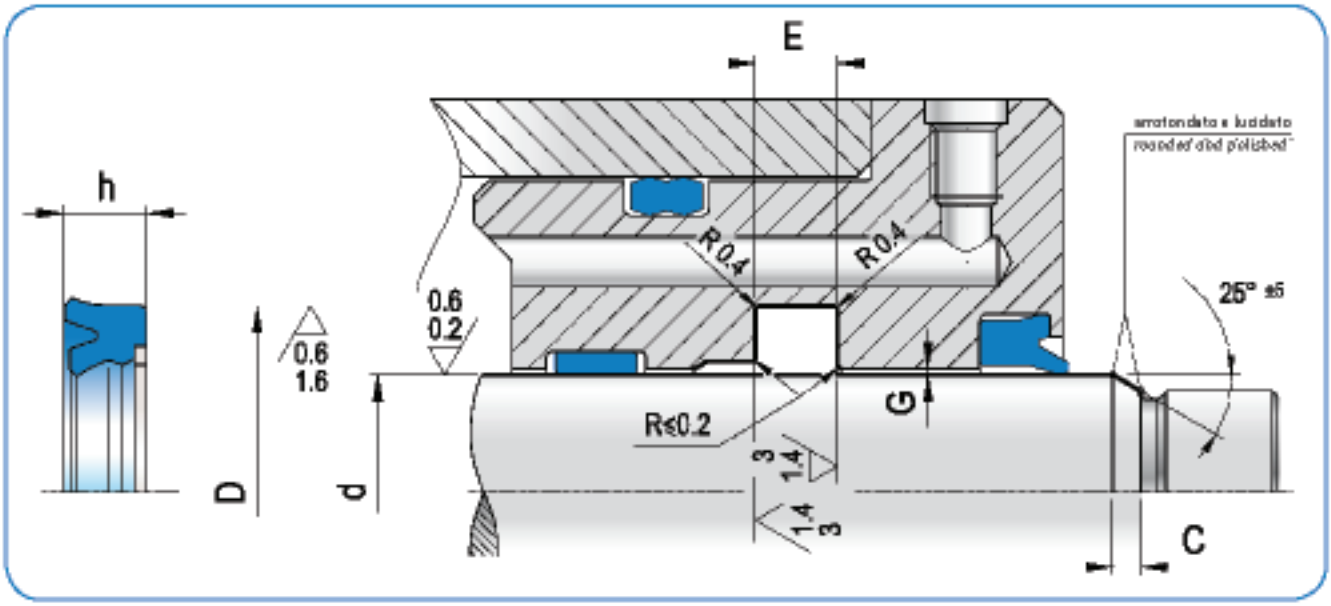

d_{h9}	D_{H10}	h	$E_{+0,2}$	C	ART / *ITEM*
40,0	55,0	10,0	11,0	5,5	RSB2 0400 0550 100 CR
42,0	51,0	10,0	11,0	4,5	RSB2 0420 0510 100 CR
45,0	60,0	10,0	11,0	5,5	RSB2 0450 0600 100 CR
50,0	59,0	10,0	11,0	4,5	RSB2 0500 0590 100 CR
50,0	60,0	7,3	8,0	5,0	RSB2 0500 0600 073 CR
50,0	65,0	10,0	11,0	5,5	RSB2 0500 0650 100 CR
50,0	70,0	12,0	13,0	6,0	RSB2 0500 0700 120 CR
56,0	71,0	11,5	12,5	5,5	RSB2 0560 0710 115 CR
60,0	69,0	10,0	11,0	4,5	RSB2 0600 0690 100 CR
60,0	75,0	11,5	12,5	5,5	RSB2 0600 0750 115 CR
60,0	80,0	12,0	13,0	6,0	RSB2 0600 0800 120 CR
63,0	78,0	11,5	12,5	5,5	RSB2 0630 0780 115 CR
63,0	83,0	12,0	13,0	6,0	RSB2 0630 0830 120 CR
65,0	80,0	11,5	12,5	5,5	RSB2 0650 0800 115 CR
70,0	80,0	7,3	8,0	5,0	RSB2 0700 0800 073 CR
70,0	85,0	11,5	12,5	5,5	RSB2 0700 0850 115 CR
75,0	95,0	13,5	14,5	6,0	RSB2 0750 0950 135 CR
80,0	95,0	11,5	12,5	5,5	RSB2 0800 0950 115 CR

d_{h9}	D_{H10}	h	$E_{+0,2}$	C	ART / *ITEM*
80,0	100,0	13,5	14,5	7,0	RSB2 0800 1000 135 CR
85,0	105,0	12,0	13,0	7,0	RSB2 0850 1050 120 CR
85,0	105,0	13,5	14,5	7,0	RSB2 0850 1050 135 CR
90,0	105,0	11,5	12,5	6,0	RSB2 0900 1050 115 CR
95,0	115,0	13,5	14,5	7,0	RSB2 0950 1150 135 CR
100,0	120,0	12,0	13,0	7,0	RSB2 1000 1200 120 CR
100,0	120,0	13,5	14,5	7,0	RSB2 1000 1200 135 CR
105,0	125,0	12,0	13,0	7,0	RSB2 1050 1250 120 CR
110,0	130,0	12,0	13,0	7,0	RSB2 1100 1300 120 CR
120,0	140,0	12,0	13,0	7,0	RSB2 1200 1400 120 CR
125,0	145,0	12,0	13,0	7,0	RSB2 1250 1450 120 CR

CR = CO (TPU 93 shore A) + RO (POM)

Nota: altre dimensioni non a catalogo a richiesta. Consultare il nostro ufficio tecnico.

Remark: please contact our technical dept. for further dimensions not included in the catalogue.



RSC

TENUTA STELO TIPO RSC

Descrizione

La guarnizione tipo RSC è stata realizzata con ingombri limitati e per quei cilindri dove è possibile avere variazioni di pressione e di velocità elevate
Il profilo è stato progettato con una gola poco profonda per garantire un forte contatto tra le parti statiche e le parti dinamiche anche in assenza di pressione.

Dati tecnici

Pressione:	< 400 bar a temperatura di 60° C
Velocità:	< 0.5 m/s
Temperatura:	da - 35° C a + 100° C con punte fino a 110° C
Fluidi:	fluidi e oli minerali (vedi tabella 1 a pagina 12)

Materiale

Il materiale proposto è il poliuretano tipo C0 ad alto modulo elastico, basso compression-set, alta resistenza all'abrasione.
Ha una durezza di 93 Shore A ± 2.
Codice materiale: C0

Montaggio

Per evitare che si danneggino le guarnizioni durante il montaggio occorre eliminare le bave e gli spigoli taglienti nella sede e sullo stelo.
E' consigliabile lubrificare la tenuta durante il montaggio per agevolare l'inserimento dello stelo.
Per ulteriori informazioni leggere le istruzioni di montaggio a pag. 26.

RSC TYPE ROD SEAL

Description

The RSC seal has small dimensions and has been developed for cylinders used in presence of pressure variation and high speed.
The profile has been designed with a shallow groove to ensure tight contact between the static and dynamic part, even in zero pressure situations.

Technical data

Pressure:	*< 400 bar at a temperature of 60° C*
Speed:	*< 0.5 m/s*
Temperature:	*from - 35° C to + 100° C, with peaks to 110° C*
Fluids:	*mineral oils and fluids (see table 1, page 12)*

Material

The proposed material is a "C0" type polyurethane, with high elasticity modulus, low compression-set and high abrasion resistance.
The hardness is 93 Shore A ± 2.
Compound reference: C0

Assembling

To prevent and damage to the seal, remove any flash and cutting edges in the housing and on the rod.
The seal should always be lubricated before assembling in order to have easier insertion of the rod.
For further information please refer to the installation instructions on page 26.



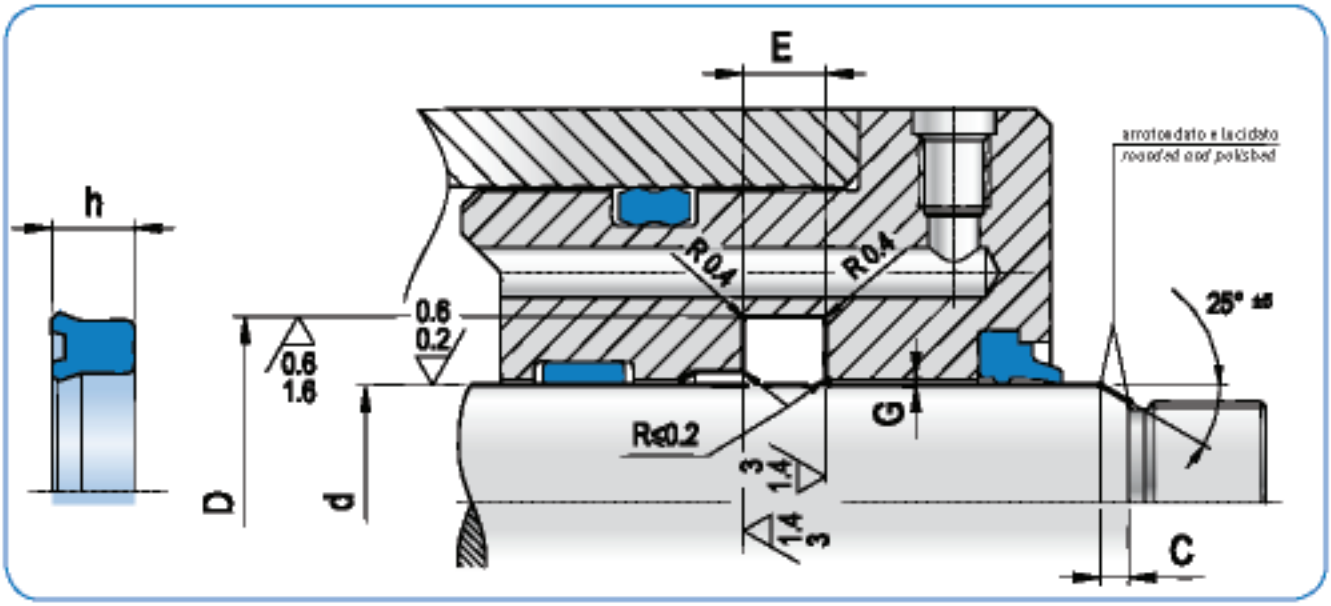

d_{h9}	D_{H10}	h	$E_{+0,2}$	C	ART / *ITEM*
6,0	14,0	5,8	6,3	4,5	RSC 0060 0140 058 C0
8,0	14,0	5,8	6,3	4,0	RSC 0080 0140 058 C0
8,0	16,0	5,8	6,3	4,5	RSC 0080 0160 058 C0
10,0	18,0	5,8	6,3	4,5	RSC 0100 0180 058 C0
12,0	18,0	4,5	5,0	4,0	RSC 0120 0180 045 C0
12,0	20,0	5,8	6,3	4,5	RSC 0120 0200 058 C0
14,0	21,0	5,0	5,5	4,0	RSC 0140 0210 050 C0
14,0	22,0	5,8	6,3	4,5	RSC 0140 0220 058 C0
16,0	22,0	4,0	4,5	3,5	RSC 0160 0220 040 C0
16,0	24,0	5,8	6,3	4,5	RSC 0160 0240 058 C0
16,0	24,0	6,0	7,0	4,5	RSC 0160 0240 060 C0
18,0	22,0	4,0	4,5	3,0	RSC 0180 0220 040 C0
18,0	26,0	5,8	6,3	4,5	RSC 0180 0260 040 C0
20,0	25,0	4,0	4,5	4,0	RSC 0200 0250 040 C0
20,0	26,0	5,0	5,5	4,0	RSC 0200 0260 050 C0
* 20,0	28,0	5,8	6,3	4,5	RSC 0200 0280 058 C0
* 20,0	30,0	7,0	8,0	5,0	RSC 0200 0300 070 C0
22,0	28,0	4,5	5,0	4,0	RSC 0220 0280 045 C0
22,0	28,0	5,8	6,3	3,5	RSC 0220 0280 058 C0
22,0	29,0	5,0	5,5	4,0	RSC 0220 0290 050 C0
* 22,0	30,0	5,8	6,3	4,5	RSC 0220 0300 058 C0
22,0	30,0	7,0	8,0	4,5	RSC 0220 0300 070 C0
22,0	32,0	7,0	8,0	5,0	RSC 0220 0320 070 C0
24,0	32,0	5,7	6,3	4,5	RSC 0240 0320 057 C0
24,0	34,0	5,7	6,3	4,5	RSC 0240 0340 057 C0
25,0	31,0	5,0	5,5	3,5	RSC 0250 0310 050 C0
* 25,0	33,0	5,8	6,3	4,5	RSC 0250 0330 058 C0

d_{h9}	D_{H10}	h	$E_{+0,2}$	C	ART / *ITEM*
25,0	33,0	8,0	9,0	4,5	RSC 0250 0330 080 C0
25,0	35,0	5,0	5,5	5,0	RSC 0250 0350 050 C0
25,0	35,0	7,0	8,0	5,0	RSC 0250 0350 070 C0
* 28,0	36,0	5,8	6,3	4,5	RSC 0280 0360 058 C0
28,0	38,0	5,8	6,3	5,0	RSC 0280 0380 058 C0
28,0	38,0	7,0	8,0	5,0	RSC 0280 0380 070 C0
30,0	38,0	5,8	6,3	4,5	RSC 0300 0380 058 C0
30,0	38,0	6,0	7,0	4,5	RSC 0300 0380 060 C0
30,0	38,0	7,0	8,0	4,5	RSC 0300 0380 070 C0
30,0	38,0	8,0	9,0	4,5	RSC 0300 0380 080 C0
30,0	40,0	7,0	8,0	5,0	RSC 0300 0400 070 C0
30,0	40,0	10,0	11,0	5,0	RSC 0300 0400 100 C0
32,0	40,0	6,0	7,0	4,5	RSC 0320 0400 060 C0
32,0	40,0	8,0	9,0	4,5	RSC 0320 0400 080 C0
* 32,0	42,0	7,0	8,0	5,0	RSC 0320 0420 070 C0
32,0	42,0	8,0	9,0	5,0	RSC 0320 0420 080 C0
32,0	42,0	9,0	10,0	5,0	RSC 0320 0420 090 C0
35,0	43,0	5,8	6,3	4,5	RSC 0350 0430 058 C0
35,0	43,0	6,0	7,0	4,5	RSC 0350 0430 060 C0
35,0	43,0	6,3	7,0	4,5	RSC 0350 0430 063 C0
35,0	43,0	7,0	8,0	4,5	RSC 0350 0430 070 C0
35,0	43,0	8,0	9,0	4,5	RSC 0350 0430 080 C0
35,0	45,0	7,0	8,0	5,0	RSC 0350 0450 070 C0
35,0	45,0	10,0	11,0	5,0	RSC 0350 0430 070 C0
35,0	45,0	10,0	11,0	5,0	RSC 0350 0450 100 C0
35,0	45,0	11,0	12,0	5,0	RSC 0350 0450 120 C0
* 36,0	44,0	5,8	6,3	4,5	RSC 0360 0440 058 C0

* In conformità alle norme ISO/DIN 5597 e ISO 5597/1 – *In accordance with ISO/DIN 5597 and ISO 5597/1 norms*



RSC

	d_{h9}	D_{H10}	h	$E_{\pm 0,2}$	C	ART / *ITEM*
	36,0	44,0	6,0	7,0	4,5	RSC 0360 0440 060 C0
	36,0	44,0	6,3	7,0	4,5	RSC 0360 0440 063 C0
	36,0	44,0	7,0	8,0	4,5	RSC 0360 0440 070 C0
	36,0	44,0	8,0	9,0	4,5	RSC 0360 0440 080 C0
	36,0	44,0	9,0	10,0	4,5	RSC 0360 0440 090 C0
	36,0	46,0	7,0	8,0	5,0	RSC 0360 0460 070 C0
	36,0	46,0	7,2	8,0	4,5	RSC 0360 0440 072 C0
	36,0	46,0	10,0	11,0	5,0	RSC 0360 0460 100 C0
	36,0	46,0	11,0	12,0	5,0	RSC 0360 0460 110 C0
	38,0	45,0	6,0	7,0	4,5	RSC 0380 0450 060 C0
	40,0	48,0	5,8	6,3	4,5	RSC 0400 0480 058 C0
	40,0	48,0	6,0	7,0	4,5	RSC 0400 0480 060 C0
	40,0	48,0	7,0	8,0	4,5	RSC 0400 0480 070 C0
	40,0	48,0	8,0	9,0	4,5	RSC 0400 0480 080 C0
	40,0	50,0	6,0	7,0	5,0	RSC 0400 0500 060 C0
*	40,0	50,0	7,0	8,0	5,0	RSC 0400 0500 070 C0
	40,0	50,0	10,0	11,0	5,0	RSC 0400 0500 100 C0
	42,0	50,0	6,0	7,0	4,5	RSC 0420 0500 060 C0
	42,0	50,0	7,0	8,0	4,5	RSC 0420 0500 070 C0
	45,0	53,0	6,0	7,0	4,5	RSC 0450 0530 060 C0
	45,0	53,0	6,3	7,0	4,5	RSC 0450 0530 063 C0
	45,0	53,0	7,0	8,0	4,5	RSC 0450 0530 070 C0
*	45,0	55,0	5,8	6,3	5,0	RSC 0450 0550 058 C0
	45,0	55,0	6,3	7,0	5,0	RSC 0450 0550 063 C0
*	45,0	55,0	7,0	8,0	5,0	RSC 0450 0550 070 C0
	46,0	54,0	7,0	8,0	4,5	RSC 0460 0540 070 C0
	46,0	54,0	7,5	8,5	4,5	RSC 0460 0540 075 C0
	46,0	54,0	8,0	9,0	4,5	RSC 0460 0540 080 C0
	50,0	58,0	8,0	9,0	4,5	RSC 0500 0580 080 C0
	50,0	58,0	9,0	10,0	4,5	RSC 0500 0580 090 C0
*	50,0	60,0	7,0	8,0	5,0	RSC 0500 0600 070 C0
	50,0	60,0	8,0	9,0	5,0	RSC 0500 0600 080 C0
	50,0	60,0	10,0	11,0	5,0	RSC 0500 0600 100 C0
	50,0	60,0	11,0	12,0	5,0	RSC 0500 0600 110 C0
	50,0	62,0	8,0	9,0	5,5	RSC 0500 0620 080 C0
	55,0	63,0	8,0	9,0	4,5	RSC 0550 0630 080 C0
	55,0	65,0	7,0	8,0	5,0	RSC 0550 0650 070 C0
	55,0	65,0	11,0	12,0	5,0	RSC 0550 0650 110 C0
	56,0	66,0	10,0	11,0	5,0	RSC 0560 0660 100 C0
	56,0	66,0	11,0	12,0	5,0	RSC 0560 0660 110 C0
*	56,0	71,0	11,5	12,5	6,0	RSC 0560 0710 115 C0
	56,0	71,0	12,5	13,5	6,0	RSC 0560 0710 125 C0
	60,0	68,0	8,0	9,0	5,0	RSC 0600 0680 080 C0
	60,0	68,0	9,0	10,0	4,5	RSC 0600 0680 090 C0
	60,0	70,0	7,0	8,0	5,5	RSC 0600 0700 070 C0

	d_{h9}	D_{H10}	h	$E_{\pm 0,2}$	C	ART / *ITEM*
	60,0	70,0	7,5	8,5	5,5	RSC 0600 0700 075 C0
	60,0	70,0	8,0	9,0	5,0	RSC 0600 0700 080 C0
	60,0	70,0	8,5	9,5	5,0	RSC 0600 0700 085 C0
	60,0	70,0	11,0	12,0	5,0	RSC 0600 0700 110 C0
	60,0	70,0	12,0	13,0	5,5	RSC 0600 0700 120 C0
	60,0	70,0	13,0	14,0	5,0	RSC 0600 0700 130 C0
	60,0	72,0	8,0	9,0	5,5	RSC 0600 0720 080 C0
	60,0	72,0	9,0	10,0	5,5	RSC 0600 0720 090 C0
	63,0	71,0	8,0	9,0	5,0	RSC 0630 0710 080 C0
	65,0	73,0	8,0	9,0	5,0	RSC 0650 0730 080 C0
	65,0	73,0	9,0	10,0	4,5	RSC 0650 0730 090 C0
	65,0	75,0	12,0	13,0	5,0	RSC 0650 0750 120 C0
	70,0	78,0	8,0	9,0	5,0	RSC 0700 0780 080 C0
	70,0	78,0	9,0	10,0	4,5	RSC 0700 0780 090 C0
*	70,0	80,0	6,5	7,5	5,5	RSC 0700 0800 065 C0
	70,0	80,0	7,0	8,0	5,5	RSC 0700 0800 070 C0
	70,0	80,0	7,5	8,5	5,0	RSC 0700 0800 075 C0
	70,0	80,0	8,0	9,0	5,0	RSC 0700 0800 080 C0
	70,0	80,0	12,0	13,0	5,5	RSC 0700 0800 120 C0
	70,0	80,0	13,0	14,0	5,0	RSC 0700 0800 130 C0
	70,0	82,0	9,5	10,5	6,0	RSC 0700 0820 095 C0
	70,0	82,0	10,5	11,5	6,0	RSC 0700 0820 105 C0
	70,0	85,0	11,5	12,5	6,0	RSC 0700 0850 115 C0
	70,0	85,0	12,5	13,5	6,5	RSC 0700 0850 125 C0
	75,0	83,0	8,0	9,0	5,0	RSC 0750 0830 080 C0
	75,0	83,0	9,0	10,0	4,5	RSC 0750 0830 090 C0
	75,0	85,0	7,0	8,0	5,5	RSC 0750 0850 070 C0
	75,0	85,0	8,0	9,0	5,0	RSC 0750 0850 080 C0
	76,0	84,0	8,0	9,0	5,0	RSC 0760 0840 080 C0
	76,0	84,0	9,0	10,0	4,5	RSC 0760 0840 090 C0
	80,0	88,0	8,0	9,0	5,0	RSC 0800 0880 080 C0
	80,0	88,0	9,0	10,0	4,5	RSC 0800 0880 090 C0
	80,0	90,0	7,0	8,0	5,5	RSC 0800 0900 070 C0
	80,0	90,0	8,0	9,0	5,0	RSC 0800 0900 080 C0
	80,0	90,0	12,0	13,0	5,0	RSC 0800 0900 120 C0
*	80,0	95,0	11,5	12,5	6,5	RSC 0800 0950 115 C0
	80,0	95,0	12,5	13,5	6,5	RSC 0800 0950 125 C0
	85,0	93,0	8,0	9,0	5,5	RSC 0850 0930 080 C0
	85,0	93,0	9,0	10,0	4,5	RSC 0850 0930 090 C0
	90,0	98,0	8,0	9,0	5,5	RSC 0900 0980 080 C0
	90,0	98,0	9,0	10,0	4,5	RSC 0900 0980 090 C0

* in conformità alle norme ISO/DIN 5597 e ISO 5597/1 – *in accordance with ISO/DIN 5597 and ISO 5597/1 norms*

Nota: altre dimensioni non a catalogo a richiesta.Consultare il nostro ufficio tecnico.

Remark: please contact our technical dept. for fulfter dimensions not included in the catalogue.

RSC



RSA
RSB
RSB2
RSC
RSD
TSS
RSO
RBR
RPS



RSD

TENUTA STELO TIPO RSD

Descrizione

La guarnizione tipo RSD è molto simile al tipo RSC, ma presenta sul lato dinamico un doppio labbro che ha più di una funzione:

- attenua eventuali fenomeni di stick-slip grazie al fluido trattenuto nell'intercapedine fra i due labbri;
- evita alle impurità di entrare dall'esterno;
- contrasta il ritiro del materiale alle basse temperature;
- funge da stabilizzatore;

Dati tecnici

Pressione:	< 400 bar a temperatura di 60° C
Velocità:	< 0.5 m/s
Temperatura:	da - 35° C a + 100° C con punte fino a 110° C
Fluidi:	fluidi e oli minerali (vedi tabella 1 a pagina 12)

Materiale

Il materiale proposto è il poliuretano tipo C0 ad alto modulo elastico, basso compression-set, alta resistenza all'abrasione.
Ha una durezza di 93 Shore A ± 2.
Codice materiale: C0

Montaggio

Per evitare che si danneggino le guarnizioni durante il montaggio occorre eliminare le bave e gli spigoli taglienti nella sede e sullo stelo.
E' consigliabile lubrificare la tenuta durante il montaggio per agevolare l'inserimento dello stelo.
Per ulteriori informazioni leggere le istruzioni di montaggio a pag. 26.

RSD TYPE ROD SEAL

Description

The RSD seal type is similar to the RSC type, but on the dynamic side, it presents a multifunctional double lip which:

- *reduces stick-slip effects thanks because it keeps oil between the secondary lip and the main one;*
- *stops any external impurities;*
- *faces the material shrinkage at low temperatures;*
- *acts as a stabilizer.*

Technical data

Pressure:	*< 400 bar at a temperature of 60° C*
Speed:	*< 0.5 m/s*
Temperature:	*from - 35° C to + 100° C with peaks till 110° C*
Fluids:	*mineral fluids and oils (see table 1, page 12)*

Material

The proposed material is a "C0" type polyurethane, with high elasticity modulus, low compression-set and high abrasion resistance.
The hardness is 93 Shore A ± 2.
Compound reference: C0

Assembling

To prevent any damage to the seal, remove any flash and cutting edges in the housing and on the rod.
The seal should always be lubricated before assembling in order to have easier insertion of the rod.
For further information please refer to the installation instructions on page 26.

RSD



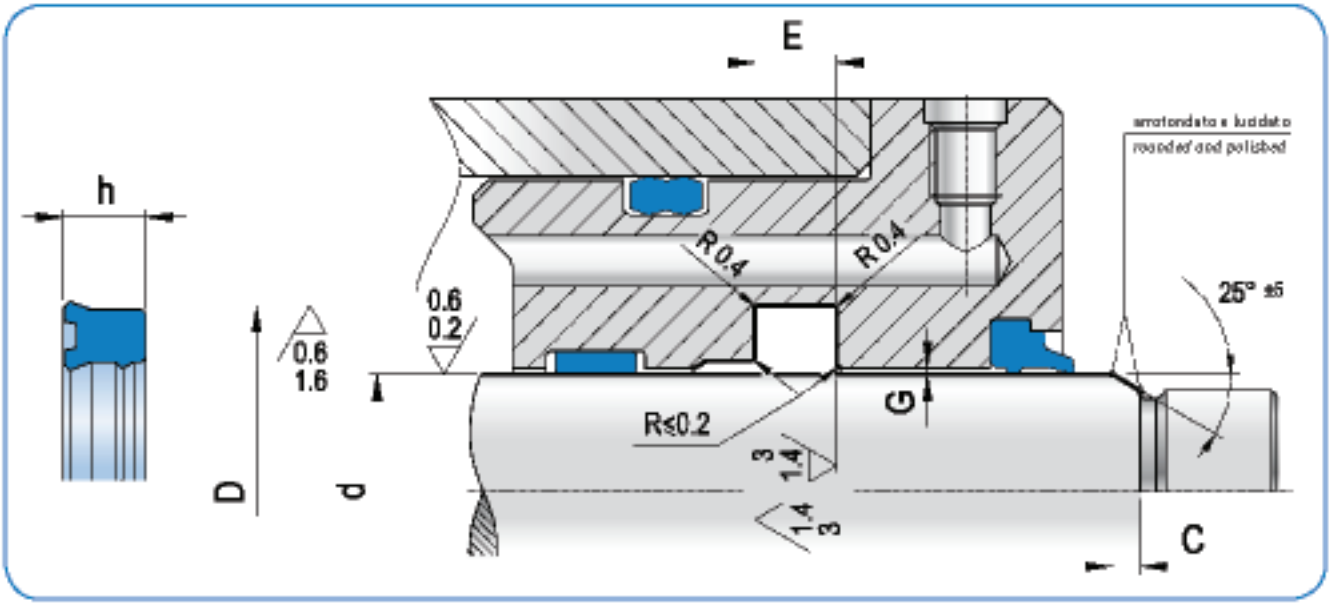

	d_{h9}	D_{H10}	h	$E_{+0,2}$	C	ART / *ITEM*
*	6,0	14,0	5,8	6,3	3,5	RSD 0060 0140 058 C0
*	8,0	14,0	5,7	6,3	3,5	RSD 0080 0140 057 C0
*	8,0	16,0	5,8	6,3	3,5	RSD 0080 0160 058 C0
*	10,0	18,0	5,8	6,3	3,5	RSD 0100 0180 058 C0
	12,0	19,0	5,0	5,6	3,5	RSD 0120 0190 050 C0
*	12,0	20,0	5,8	6,3	4,5	RSD 0120 0200 058 C0
	14,0	21,0	5,0	5,6	4,0	RSD 0140 0210 050 C0
	14,0	22,0	5,8	6,3	4,5	RSD 0140 0220 058 C0
	15,0	23,0	6,0	7,0	4,5	RSD 0150 0230 060 C0
	16,0	22,0	5,0	5,6	3,5	RSD 0160 0220 050 C0
*	16,0	24,0	5,8	6,3	4,5	RSD 0160 0240 058 C0
	18,0	22,0	4,0	4,5	3,0	RSD 0180 0220 040 C0
	18,0	25,0	5,0	5,7	4,0	RSD 0180 0250 050 C0
*	18,0	26,0	5,8	6,3	4,5	RSD 0180 0260 058 C0
	18,0	26,0	8,0	9,0	4,5	RSD 0180 0260 080 C0
	20,0	26,0	5,2	6,0	3,5	RSD 0200 0260 052 C0
*	20,0	28,0	5,8	6,3	4,5	RSD 0200 0280 058 C0
*	20,0	30,0	7,0	8,0	5,0	RSD 0200 0300 070 C0
	22,0	28,0	4,5	5,5	3,5	RSD 0220 0280 045 C0
	22,0	28,0	5,8	6,3	3,5	RSD 0220 0280 058 C0
	22,0	29,0	5,0	5,6	4,0	RSD 0220 0290 050 C0
*	22,0	30,0	5,8	6,3	4,5	RSD 0220 0300 058 C0
	24,0	32,0	5,8	6,3	4,5	RSD 0240 0320 058 C0
	25,0	31,0	5,0	5,6	3,5	RSD 0250 0310 050 C0
*	25,0	33,0	5,8	6,3	4,5	RSD 0250 0330 058 C0
	25,0	33,0	6,5	7,5	4,5	RSD 0250 0330 065 C0
	25,0	33,0	7,0	8,0	4,5	RSD 0250 0330 070 C0

	d_{h9}	D_{H10}	h	$E_{+0,2}$	C	ART / *ITEM*
*	25,0	35,0	7,0	8,0	5,0	RSD 0250 0350 070 C0
	25,0	35,0	8,0	9,0	5,0	RSD 0250 0350 080 C0
*	28,0	36,0	5,8	6,3	4,5	RSD 0280 0360 058 C0
*	28,0	38,0	5,8	6,3	5,0	RSD 0280 0380 058 C0
*	28,0	38,0	7,0	8,0	5,0	RSD 0280 0380 070 C0
	30,0	38,0	5,8	6,3	4,5	RSD 0300 0380 058 C0
	30,0	38,0	7,0	8,0	4,5	RSD 0300 0380 070 C0
	30,0	38,0	8,0	9,0	4,5	RSD 0300 0380 080 C0
	30,0	40,0	6,5	7,5	5,0	RSD 0300 0400 065 C0
	30,0	40,0	10,0	11,0	5,0	RSD 0300 0400 100 C0
	32,0	40,0	5,8	6,3	4,5	RSD 0320 0400 058 C0
	32,0	40,0	6,0	7,0	4,5	RSD 0320 0400 060 C0
	32,0	40,0	8,0	9,0	4,5	RSD 0320 0400 080 C0
*	32,0	42,0	7,0	8,0	4,5	RSD 0320 0420 070 C0
	32,0	42,0	8,0	9,0	5,0	RSD 0320 0420 080 C0
	32,0	42,0	10,0	11,0	5,0	RSD 0320 0420 100 C0
	32,0	45,0	8,0	9,0	7,0	RSD 0320 0450 080 C0
	35,0	43,0	5,8	6,3	4,5	RSD 0350 0430 058 C0
	35,0	43,0	6,0	7,0	4,5	RSD 0350 0430 060 C0
	35,0	43,0	8,0	9,0	4,5	RSD 0350 0430 080 C0
	35,0	45,0	7,0	8,0	5,0	RSD 0350 0450 070 C0
	35,0	45,0	10,0	11,0	5,0	RSD 0350 0450 100 C0
*	36,0	44,0	5,8	6,3	4,5	RSD 0360 0440 058 C0
	36,0	44,0	8,0	9,0	4,5	RSD 0360 0440 080 C0
	40,0	48,0	5,8	6,3	4,5	RSD 0400 0480 058 C0
	40,0	48,0	8,0	9,0	4,5	RSD 0400 0480 080 C0
*	40,0	50,0	7,0	8,0	5,0	RSD 0400 0500 070 C0

* in conformità alle norme ISO/DIN 5597 e ISO 5597/1 – in *accordance with ISO/DIN 5597 and ISO 5597/1 norms*



RSD

	d_{h9}	D_{H10}	h	$E_{+0,2}$	C	ART / *ITEM*
	40,0	50,0	10,0	11,0	5,0	RSD 0400 0500 100 C0
	40,0	55,0	10,0	11,0	6,5	RSD 0400 0550 100 C0
	42,0	50,0	6,0	7,0	4,5	RSD 0420 0500 060 C0
	42,0	52,0	8,0	9,0	5,0	RSD 0420 0520 080 C0
*	45,0	53,0	5,8	6,3	4,5	RSD 0450 0530 058 C0
	45,0	53,0	8,0	9,0	4,5	RSD 0450 0530 080 C0
	45,0	53,0	10,0	11,0	4,5	RSD 0450 0530 100 C0
*	45,0	55,0	5,7	6,3	5,0	RSD 0450 0550 057 C0
*	45,0	55,0	7,0	8,0	5,0	RSD 0450 0550 070 C0
	45,0	55,0	10,0	11,0	5,0	RSD 0450 0550 100 C0
	46,0	54,0	8,0	9,0	4,5	RSD 0460 0540 080 C0
	50,0	58,0	8,0	9,0	4,5	RSD 0500 0580 080 C0
*	50,0	60,0	7,0	8,0	5,0	RSD 0500 0600 070 C0
	50,0	60,0	9,0	10,0	5,0	RSD 0500 0600 090 C0
	50,0	60,0	10,0	11,0	5,0	RSD 0500 0600 100 C0
	50,0	65,0	8,0	9,0	6,5	RSD 0500 0650 080 C0
	50,0	65,0	10,0	11,0	6,5	RSD 0500 0650 100 C0
	55,0	63,0	8,0	9,0	4,5	RSD 0550 0630 080 C0
	55,0	65,0	7,0	8,0	5,0	RSD 0550 0650 070 C0
	55,0	65,0	10,0	11,0	5,0	RSD 0550 0650 100 C0
	56,0	64,0	8,0	9,0	4,5	RSD 0560 0640 080 C0
	56,0	66,0	6,5	7,5	5,0	RSD 0560 0660 065 C0
*	56,0	71,0	11,5	12,5	6,5	RSD 0560 0710 115 C0
	60,0	68,0	8,0	9,0	4,5	RSD 0600 0680 080 C0
	60,0	70,0	7,0	8,0	5,5	RSD 0600 0700 070 C0
	60,0	70,0	7,5	8,5	5,5	RSD 0600 0700 075 C0
	60,0	70,0	10,0	11,0	5,5	RSD 0600 0700 100 C0
	60,0	70,0	12,0	13,0	5,5	RSD 0600 0700 120 C0
	60,0	72,0	9,0	10,0	6,0	RSD 0600 0720 090 C0
	61,0	69,0	8,0	9,0	4,5	RSD 0610 0690 080 C0
	63,0	71,0	8,0	9,0	4,5	RSD 0630 0710 080 C0
	65,0	73,0	8,0	9,0	4,5	RSD 0650 0730 080 C0
	65,0	75,0	12,0	13,0	5,0	RSD 0650 0750 120 C0
	65,0	77,0	9,0	10,0	6,0	RSD 0650 0770 090 C0
	68,0	76,0	8,0	9,0	4,5	RSD 0680 0760 080 C0
	70,0	78,0	8,0	9,0	4,5	RSD 0700 0780 080 C0
*	70,0	80,0	6,5	7,5	5,5	RSD 0700 0800 065 C0
	70,0	80,0	7,0	8,0	5,0	RSD 0700 0800 070 C0
	70,0	80,0	12,0	13,0	5,5	RSD 0700 0800 120 C0
	70,0	82,0	9,5	10,5	6,0	RSD 0700 0820 095 C0
*	70,0	85,0	11,5	12,5	6,5	RSD 0700 0850 115 C0
	75,0	83,0	8,0	9,0	4,5	RSD 0750 0830 080 C0
	75,0	85,0	7,0	8,0	5,5	RSD 0750 0850 070 C0
	75,0	85,0	12,0	13,0	5,5	RSD 0750 0850 120 C0
	76,0	84,0	8,0	9,0	4,5	RSD 0760 0840 080 C0

	d_{h9}	D_{H10}	h	$E_{+0,2}$	C	ART / *ITEM*
	76,0	86,0	8,0	9,0	5,0	RSD 0760 0860 080 C0
	78,0	86,0	8,0	9,0	4,5	RSD 0780 0860 080 C0
	80,0	88,0	8,0	9,0	4,5	RSD 0800 0880 080 C0
	80,0	90,0	12,0	13,0	5,0	RSD 0800 0900 120 C0
	80,0	92,0	9,0	10,0	6,0	RSD 0800 0920 090 C0
*	80,0	95,0	11,5	12,5	6,5	RSD 0800 0950 115 C0
	85,0	93,0	8,0	9,0	4,5	RSD 0850 0930 080 C0
	85,0	95,0	12,0	13,0	5,5	RSD 0850 0950 120 C0
	90,0	98,0	8,0	9,0	4,5	RSD 0900 0980 080 C0
*	90,0	100,0	6,5	7,5	5,5	RSD 0900 1000 065 C0
*	90,0	105,0	11,5	12,5	6,5	RSD 0900 1050 115 C0
	91,0	99,0	8,0	9,0	4,5	RSD 0910 0990 080 C0
	95,0	103,0	8,0	9,0	4,5	RSD 0950 1030 080 C0
	100,0	108,0	6,5	7,5	4,5	RSD 1000 1080 065 C0
	100,0	108,0	8,0	9,0	4,5	RSD 1000 1080 080 C0
	105,0	113,0	8,0	9,0	4,5	RSD 1050 1130 080 C0
	107,0	115,0	8,0	9,0	4,5	RSD 1070 1150 080 C0
	108,0	116,0	8,0	9,0	4,5	RSD 1080 1160 080 C0
*	110,0	125,0	9,5	10,5	6,5	RSD 1100 1250 095 C0
	110,0	125,0	11,0	12,0	6,5	RSD 1100 1250 110 C0
	115,0	123,0	8,0	9,0	4,5	RSD 1150 1230 080 C0
	115,0	130,0	11,3	12,0	6,5	RSD 1150 1300 113 C0
	120,0	128,0	11,5	12,5	4,5	RSD 1200 1280 115 C0
	120,0	135,0	15,0	16,0	6,5	RSD 1200 1350 150 C0
	125,0	133,0	8,0	9,0	4,5	RSD 1250 1330 080 C0
	126,0	134,0	8,0	9,0	4,5	RSD 1260 1340 080 C0
	130,0	145,0	15,0	16,0	6,5	RSD 1300 1450 150 C0
	135,0	143,0	8,0	9,0	4,5	RSD 1350 1430 080 C0
	135,0	150,0	11,5	12,5	6,5	RSD 1350 1500 115 C0
	140,0	150,0	11,5	12,5	5,0	RSD 1400 1500 115 C0
	145,0	153,0	8,0	9,0	4,5	RSD 1450 1530 080 C0

Nota: altre dimensioni non a catalogo a richiesta.Consultare il nostro ufficio tecnico.

Remark: please contact our technical dept. for fulter dimensions not included in the catalogue.

* in conformità alle norme ISO/DIN 5597 e ISO 5597/1 – *in accordance with ISO/DIN 5597 and ISO 5597/1 norms*

RSD





TSS

TENUTA STELO TIPO TSS

Descrizione

La tenuta stelo tipo TSS consta di un anello opportunamente sagomato in PTFE caricato avente funzione di tenuta dinamica e di un anello O-Ring che effettua la tenuta statica e contemporaneamente svolge un effetto energizzante.

Dati Tecnici

Pressione: < 600 bar
Velocità: < 15 m/s
Temperatura: per il tipo standard con OR in nitrile da - 30° C a + 100° C, con punte per periodi brevi fino a 120° C.
Per range di temperature differente occorre sostituire l'O-Ring con un altro tipo più idoneo

Materiale

Per il tipo standard PTFE caricato bronzo ed O-Ring in nitrile.
Codice materiale: TN

Montaggio

Le guarnizioni in PTFE necessitano di precauzioni estremamente rigorose, maggiori che per tutte le altre tipologie di tenuta. E' fondamentale eliminare gli spigoli vivi e le bave nelle sedi. Il montaggio delle guarnizioni per lo stelo segue normalmente questa sequenza:

- Installare O-Ring nella sede;
- Deformare l'anello in PTFE, con l'ausilio di un mandrino e una bussola ad espansione;
- Calibrare con una bussola opportunamente dimensionata (pag. 27 - fig. 9)

TSS TYPE ROD SEAL

Description

The TSS rod seal is composed of two rings. The dynamic seal is a ring in filled PTFE while the static seal is an O-Ring also acting as energizer.

Technical data

Pressure: *< 600 bar*
Speed: *< 15 m/s*
Temperature: *from - 30° C up to + 100° C for the standard type with nitrile OR. Short peaks till 120° C. For a different temperature range, the O-Ring should be replaced by a more suitable model*

Material

Bronze-filled PTFE for the standard type, and is NBR (Nitrile butadiene rubber) O-Ring.
Compound reference: TN

Assembling

PTFE seals require careful assembling operations in comparison to other types of seals It is necessary to remove flashes and/or cutting edges in the grooves The rod seal is usually assembled in the following sequence:

- *fit the O-Ring into the groove*
- *twist the PTFE ring using a mandrel and a expansion bush;*
- *calibrate with a plastic conical tool (Page 27 Fig.9)*

TSS



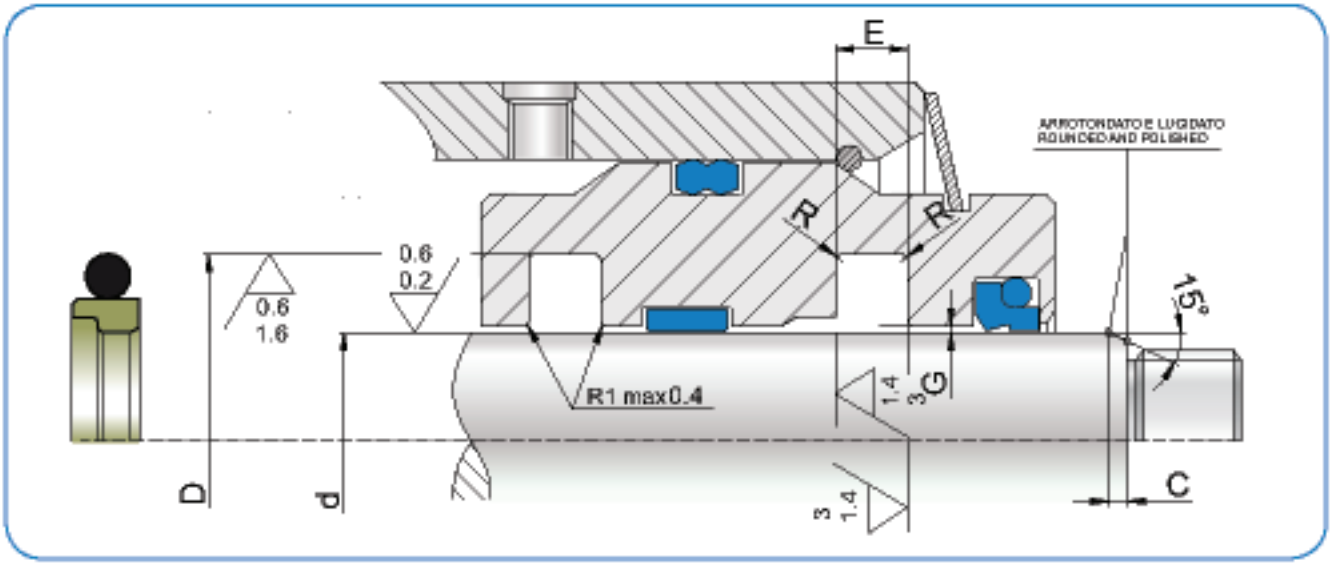

d_{h9}	D_{H9}	$E_{+0,2}$	O-R	C	ART / ITEM
4,0	8,9	2,20	010	5,0	TSS 0040 0089 022 TBN0
5,0	9,9	2,20	010	5,0	TSS 0050 099 022 TBN0
7,0	11,9	2,20	012	5,0	TSS 0070 0119 022 TBN0
8,0	15,3	3,20	111	5,0	TSS 0080 0153 032 TBN0
10,0	17,3	3,20	112	5,0	TSS 0100 0173 032 TBN0
12,0	19,3	3,20	114	5,0	TSS 0120 0193 032 TBN0
14,0	21,3	3,20	115	5,0	TSS 0140 0213 032 TBN0
15,0	22,3	3,20	116	5,0	TSS 0150 0223 032 TBN0
16,0	23,3	3,20	116	5,0	TSS 0160 0233 032 TBN0
18,0	25,3	3,20	117	5,0	TSS 0180 0253 032 TBN0
20,0	30,7	4,20	214	5,0	TSS 0200 0307 042 TBN0
22,0	32,7	4,20	215	5,0	TSS 0220 0327 042 TBN0
24,0	34,7	4,20	216	5,0	TSS 0240 0347 042 TBN0
25,0	35,7	4,20	217	5,0	TSS 0250 0357 042 TBN0
26,0	36,7	4,20	218	5,0	TSS 0260 0367 042 TBN0
28,0	38,7	4,20	219	5,0	TSS 0280 0387 042 TBN0
30,0	40,7	4,20	220	5,0	TSS 0300 0407 042 TBN0
32,0	42,7	4,20	221	5,0	TSS 0320 0427 042 TBN0
35,0	45,7	4,20	222	5,0	TSS 0350 0457 042 TBN0
37,0	47,7	4,20	223	5,0	TSS 0370 0477 042 TBN0
38,0	53,1	6,30	327	5,0	TSS 0380 0531 063 TBN0
40,0	55,1	6,30	328	5,0	TSS 0400 0551 063 TBN0
42,0	57,1	6,30	328	5,0	TSS 0420 0571 063 TBN0
45,0	60,1	6,30	329	5,0	TSS 0450 0601 063 TBN0
48,0	63,1	6,30	330	5,0	TSS 0480 0631 063 TBN0
50,0	65,1	6,30	331	5,0	TSS 0500 0651 063 TBN0
52,0	67,1	6,30	331	5,0	TSS 0520 0671 063 TBN0
55,0	70,1	6,30	332	5,0	TSS 0550 0701 063 TBN0
58,0	73,1	6,30	333	5,0	TSS 0580 0731 063 TBN0
60,0	75,1	6,30	334	5,0	TSS 0600 0751 063 TBN0

d_{h9}	D_{H9}	$E_{+0,2}$	O-R	C	ART / ITEM
65,0	80,1	6,30	335	5,0	TSS 0650 0801 063 TBN0
70,0	85,1	6,30	337	5,0	TSS 0700 0851 063 TBN0
75,0	90,1	6,30	339	5,0	TSS 0750 0901 063 TBN0
80,0	95,1	6,30	340	5,0	TSS 0800 0951 063 TBN0
85,0	100,1	6,30	342	5,0	TSS 0850 1001 063 TBN0
90,0	105,1	6,30	343	5,0	TSS 0900 1051 063 TBN0
95,0	110,1	6,30	345	7,0	TSS 0950 1101 063 TBN0
100,0	115,1	6,30	346	7,0	TSS 1000 1151 063 TBN0
110,0	125,1	6,30	350	7,0	TSS 1100 1251 081 TBN0
120,0	135,1	6,30	353	7,0	TSS 1200 1351 081 TBN0
125,0	140,1	6,30	354	7,0	TSS 1250 1401 081 TBN0
130,0	145,1	6,30	356	7,0	TSS 1300 1451 081 TBN0
140,0	155,1	6,30	359	7,0	TSS 1400 1551 081 TBN0
150,0	165,1	6,30	361	7,0	TSS 1500 1651 081 TBN0
155,0	170,1	6,30	362	7,0	TSS 1550 1701 081 TBN0
160,0	175,1	6,30	363	7,0	TSS 1600 1751 081 TBN0
170,0	185,1	6,30	365	7,0	TSS 1700 1851 081 TBN0
175,0	190,1	6,30	366	7,0	TSS 1750 1901 081 TBN0
180,0	195,1	6,30	366	7,0	TSS 1800 1951 081 TBN0
185,0	200,1	6,30	367	7,0	TSS 1850 2001 081 TBN0
190,0	205,1	6,30	368	7,0	TSS 1900 2051 081 TBN0
195,0	210,1	6,30	368	7,0	TSS 1950 2101 081 TBN0
200,0	220,5	8,10	445	10,0	TSS 2000 2205 081 TBN0
210,0	230,5	8,10	446	10,0	TSS 2100 2305 081 TBN0
220,0	240,5	8,10	447	10,0	TSS 2200 2405 081 TBN0
225,0	245,5	8,10	447	10,0	TSS 2250 2455 081 TBN0
230,0	250,5	8,10	448	10,0	TSS 2300 2505 081 TBN0
240,0	260,5	8,10	448	10,0	TSS 2400 2605 081 TBN0
250,0	270,5	8,10	449	10,0	TSS 2500 2705 081 TBN0



RSO

TENUTA STELO TIPO RSO

Descrizione

La tenuta tipo RSO è stata sviluppata per sostituire o per lavorare in tandem con guarnizioni a gradino in PTFE, avendo le stesse dimensioni di sede.
Presenta al suo interno una gola arrotondata dove può essere alloggiato ed inserito un o-ring che ha la funzione di energizzare i labbri di tenuta dinamico statico anche in assenza di pressione.
Questo profilo può essere utilizzato anche a bassissima velocità e pressione con risultati eccellenti per il basso attrito sviluppato.
Ha dei ridotti ingombri assiali e quindi lavorazioni di sede semplici.

Dati tecnici

Pressione:	< 250 bar a temperatura di 60° C
Velocità:	< 0.5 m/s
Temperatura:	da - 35° C a + 100° C con punte fino a 110° C
Fluidi:	oli a base minerale (vedi tabella 1 a pagina 12)

Materiale

Il materiale proposto per la tenuta è il poliuretano tipo C0 ad alto modulo elastico (standard 93 Sh A), basso compression-set ed elevata resistenza all'abrasione energizzato da un o-ring in NBR 70 (N0).
Codice materiale: CN (•)

Montaggio

Come per tutte le sedi dove alloggia la guarnizione occorre eliminare le bave e gli spigoli taglienti.
Per ulteriori informazioni leggere le istruzioni di montaggio a pag. 26.

RSO TYPE ROD SEAL

Description

The RSO seal type has been developed to replace or work jointly with stepseals in PTFE, because of the same groove dimension.
Internally it has a round groove where an O-ring can be inserted and housed. The O-Ring acts as energizer for the static and dynamic sealing lips even without pressure.
This profile has also excellent results at very low speed and pressure, because of the low friction.
The machining of the groove is easier thanks to the reduced axial dimension.

Technical data

Pressure:	*< 250 bar at a temperature of 60° C*
Speed:	*< 0.5 m/s*
Temperature:	*from - 35° C to + 100° C, with peaks of 110° C*
Fluids:	*mineral oils (see TABLE I, pages 12-13) (see table 1, page 12)*

Material

The proposed material is a "C0" type polyurethane, with high elasticity modulus, low compression-set and high abrasion resistance.
The hardness is 93 Shore A ± 2, energized with O-ring in NBR 70 (N0).
Compound reference: CN (•)

Assembling

As for all seal housings, remove any flash or cutting edges.
For further information please refer to the installation instructions on page 26.

* in conformità alle norme ISO/DIN 5597 e ISO 5597/1 – *in accordance with ISO/DIN 5597 and ISO 5597/1 norms*

RSO



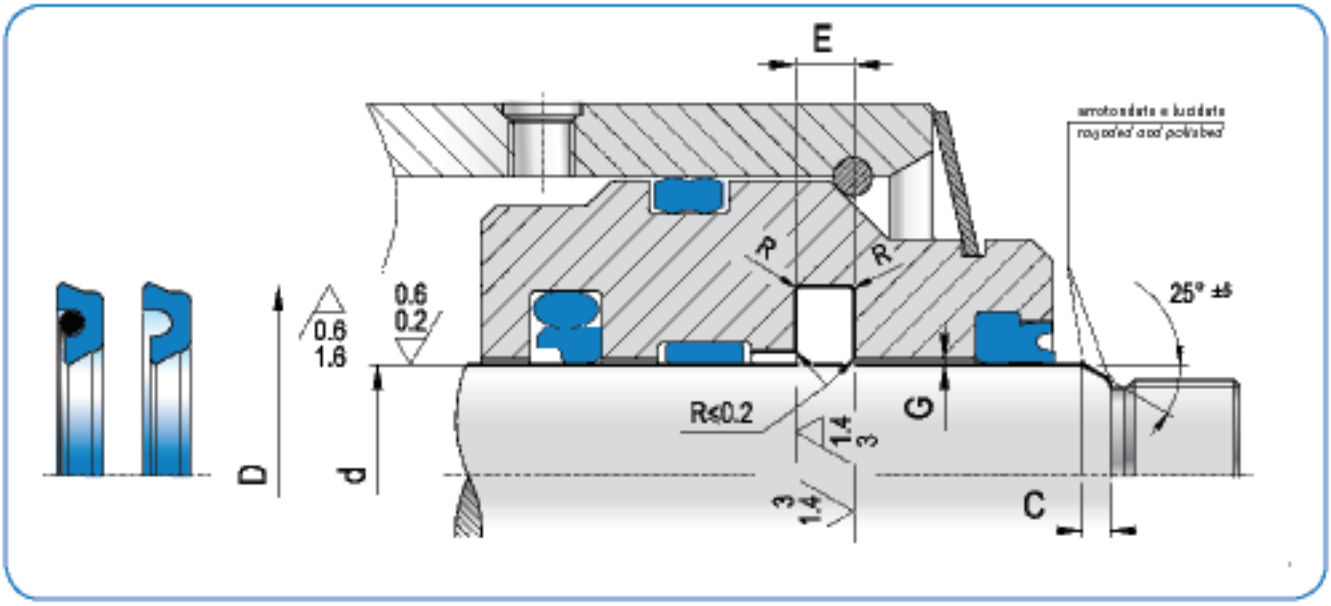

	d_{h9}	D_{H10}	$E_{+0,2}$	R	C	o-ring	ART / *ITEM*
*	12,0(1)	19,5	3,2	0,5	3,0	-	RSO 0120 0195 032 C0
*	14,0(1)	21,5	3,2	0,5	3,0	-	RSO 0140 0215 032 C0
*	16,0(1)	23,5	3,2	0,5	3,0	-	RSO 0160 0235 032 C0
*	18,0(1)	25,5	3,2	0,5	3,0	-	RSO 0180 0255 032 C0
*	20,0(1)	27,5	3,2	0,5	3,0	-	RSO 0200 0275 032 C0
*	20,0(2)	31,0	4,2	0,5	4,0	OR 119	RSO 0200 0310 042 CN
*	22,0(1)	29,5	3,2	0,5	3,0	-	RSO 0220 0295 032 C0
*	22,0(2)	33,0	4,2	0,5	4,0	OR 120	RSO 0220 0330 042 CN
*	25,0(1)	32,5	3,2	0,5	3,0	-	RSO 0250 0325 032 C0
*	25,0(2)	36,0	4,2	0,5	4,0	OR 122	RSO 0250 0360 042 CN
*	26,5(1)	34,0	3,2	0,5	3,0	-	RSO 0265 0340 032 C0
*	28,0(2)	39,0	4,2	0,5	4,0	OR 124	RSO 0280 0390 042 CN
*	32,0(2)	43,0	4,2	0,5	4,0	OR 127	RSO 0320 0430 042 CN
*	36,0(2)	47,0	4,2	0,5	4,0	OR 129	RSO 0360 0470 042 CN
*	40,0(2)	51,0	4,2	0,5	4,0	OR 132	RSO 0400 0510 042 CN
*	40,0	55,5	6,3	0,9	5,0	OR 224	RSO 0400 0555 063 CN
*	45,0	56,0	4,2	0,5	4,0	OR 135	RSO 0450 0560 042 CN
	45,0	60,5	6,3	0,9	5,0	OR 226	RSO 0450 0605 063 CN
*	50,0	61,0	4,2	0,5	4,0	OR 138	RSO 0500 0610 042 CN
	50,0	65,5	6,3	0,9	5,0	OR 227	RSO 0500 0655 063 CN
	55,0	66,0	4,2	0,5	4,0	OR 141	RSO 0550 0660 042 CN
	55,0	70,5	6,3	0,5	4,0	OR 229	RSO 0550 0705 063 CN
*	56,0	67,0	4,2	0,5	4,0	OR 142	RSO 0560 0670 042 CN
*	56,0	71,5	6,3	0,9	5,0	OR 229	RSO 0560 0715 063 CN
*	63,0	74,0	4,2	0,5	4,0	OR 146	RSO 0630 0740 042 CN
*	63,0	78,5	6,3	0,9	5,0	OR 231	RSO 0630 0785 063 CN
	65,0	80,5	6,3	0,9	5,0	OR 232	RSO 0650 0805 063 CN

	d_{h9}	D_{H10}	$E_{+0,2}$	R	C	o-ring	ART / *ITEM*
*	70,0	85,5	6,3	0,9	5,0	OR 234	RSO 0700 0855 063 CN
	75,0	86,0	4,2	0,5	4,0	OR 152	RSO 0750 0860 042 CN
	75,0	90,5	6,3	0,9	5,0	OR 236	RSO 0750 0905 063 CN
*	80,0	95,5	6,3	0,9	5,0	OR 237	RSO 0800 0955 063 CN
*	90,0	105,5	6,3	0,9	5,0	OR 240	RSO 0900 1055 063 CN
	95,0	110,5	6,3	0,9	5,0	OR 242	RSO 0950 1105 063 CN
*	100,0	115,5	6,3	0,9	5,0	OR 243	RSO 1000 1155 063 CN
	105,0	120,5	6,3	0,9	5,0	OR 245	RSO 1050 1205 063 CN
	110,0	125,5	6,3	0,9	5,0	OR 246	RSO 1100 1255 063 CN
	115,0	130,5	6,3	0,9	5,0	OR 248	RSO 1150 1305 063 CN
	120,0	135,5	6,3	0,9	5,0	OR 250	RSO 1200 1355 063 CN
	130,0	145,5	6,3	0,9	5,0	OR 253	RSO 1300 1455 063 CN
	135,0	150,5	6,3	0,9	5,0	OR 255	RSO 1350 1505 063 CN
*	140,0	155,5	6,3	0,9	5,0	OR 256	RSO 1400 1555 063 CN
	145,0	160,5	6,3	0,9	5,0	OR 258	RSO 1450 1605 063 CN
	150,0	165,5	6,3	0,9	5,0	OR 259	RSO 1500 1655 063 CN
*	160,0	175,5	6,3	0,9	5,0	OR 260	RSO 1600 1755 063 CN
*	160,0	181,0	8,1	0,9	7,0	OR 363	RSO 1600 1810 081 CN
*	180,0	195,5	6,3	0,9	5,0	OR 263	RSO 1800 1955 063 CN
	190,0	205,5	6,3	0,9	5,0	OR 265	RSO 1900 2055 063 CN
	200,0	215,5	6,3	0,9	5,0	OR 267	RSO 2000 2155 063 CN
*	200,0	221,0	8,1	0,9	7,0	OR 370	RSO 2000 2210 081 CN

(1) = per RSO con sezione 3,75 mm non viene fornito con o-ring – for cross section 3.75mm RSO is supplied without o-ring

(2) = si consiglia la sede aperta per facilitare montaggio – open groove housing is recommended for easier installation



RBR

BUFFER RING TIPO RBR

Descrizione

L'anello RBR, avente funzione di buffer ring, è stato appositamente progettato come guarnizione primaria per lavorare esclusivamente in tandem con tenute a labbri asimmetrici (vedi RSA, pag 30).
La sua funzione è quella di permettere alla tenuta secondaria di lavorare comunque in pressione.
Non effettuando una tenuta assoluta tra le due guarnizioni si crea una camera d'olio con pressione crescente che, grazie al particolare profilo dell'anello RBR, raggiunto un certo valore, viene "liberata" all'interno del cilindro. Il tutto funziona come una valvola di massima.
Inoltre svolge il compito di contrastare i picchi id pressione.

Dati tecnici

Pressione:	< 400 bar a temperature di 60° C
Velocità:	< 0.8 m/s
Temperatura:	da - 35° C a + 100° C con punte fino a 110° C
Fluidi:	oli minerali HL e HLP (vedi tabella 1 a pagina 12)

Materiale

Il materiale proposto è il poliuretano tipo C0 a 93 Shore A con buona resistenza all'abrasione, ottimo compression-set, elevato modulo elastico necessario per la tenuta.
Per l'anello antiestrusione viene proposta una resina poliacetalica (R0) con elevata resistenza al carico di rottura.
Codice materiale: CR

Montaggio

Il montaggio avviene in cava chiusa. E' pertanto necessario montare prima la guarnizione in poliuretano poi l'anello antiestrusione.

RBR TYPE BUFFER RING

Description

The RBR ring, working as buffer ring, has been specially designed to work as main seal, to be used in combination with asymmetrical lip seals (see RSA page 30).
Its function is to maintain working pressure for the second seal. It does not provide full sealing effect so an oil chamber will thus form between the two seals Thanks to the special profile of the RBR ring, the growing pressure in the space will be released into the cylinder once a certain value is achieved. It works as a valve.
It has been also designed to compensate pressure peaks.

Technical data

Pressure:	*< 400 bar at a temperature of 60° C*
Speed:	*< 0.8 m/s*
Temperature:	*from - 35° C to + 100° C with peaks till 110° C*
Fluids:	*HL and HLP mineral oil (see table 1, page 12)*

Material

The proposed material is a "C0" type polyurethane, with high elasticity modulus, fundamental for the sealing, low compression-set and high abrasion resistance.
The hardness is 93 Shore A ± 2.
For the anti-extrusion ring we propose a polyacetal resin (R0) with high tensile strength.
Compound reference: CR

Assembling

The assembling is done in closed groove. The polyurethane seal must therefore be fitted before the anti-extrusion ring.

RBR



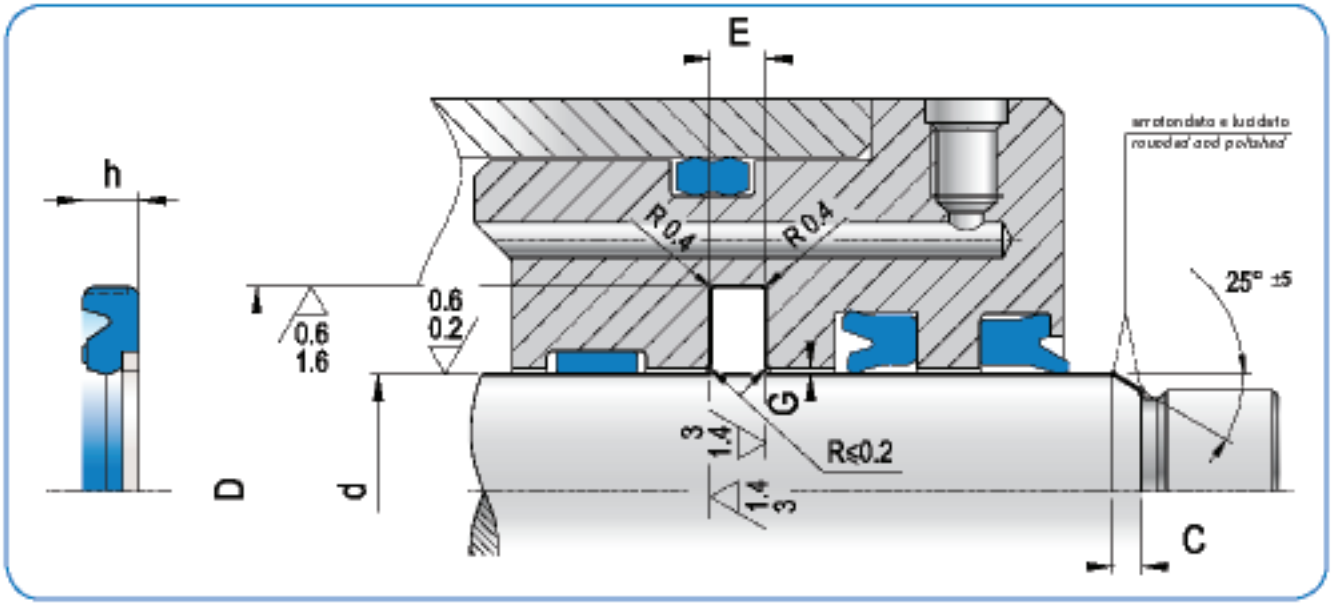

RSA
RSB
RSB2
RSC
RSD
TSS
RSO
RBR
RPS

d_{h9}	D_{H10}	h	$E_{+0,2}$	C	ART / *ITEM*
45,0	60,5	5,9	6,3	5,5	RBR 0450 0605 063 CR
50,0	65,5	5,9	6,3	5,5	RBR 0500 0655 063 CR
55,0	70,5	5,9	6,3	5,5	RBR 0550 0705 063 CR
56,0	71,5	5,9	6,3	5,5	RBR 0560 0715 063 CR
60,0	75,5	5,9	6,3	5,5	RBR 0600 0755 063 CR
65,0	80,5	5,9	6,3	5,5	RBR 0650 0805 063 CR
63,0	78,5	5,9	6,3	5,5	RBR 0630 0785 063 CR
70,0	85,5	5,9	6,3	6,0	RBR 0700 0855 063 CR
75,0	90,5	5,9	6,3	6,0	RBR 0750 0905 063 CR
80,0	95,5	5,9	6,3	6,0	RBR 0800 0955 063 CR
85,0	100,5	5,9	6,3	6,0	RBR 0850 1005 063 CR
90,0	105,5	5,9	6,3	6,0	RBR 0900 1055 063 CR

d_{h9}	D_{H10}	h	$E_{+0,2}$	C	ART / *ITEM*
95,0	110,5	5,9	6,3	6,0	RBR 0950 1105 063 CR
100,0	115,5	5,9	6,3	6,0	RBR 1000 1155 063 CR
105,0	120,5	5,9	6,3	6,0	RBR 1050 1205 063 CR
110,0	125,5	5,9	6,3	6,0	RBR 1100 1255 063 CR
115,0	130,5	5,9	6,3	6,0	RBR 1150 1305 063 CR
120,0	135,5	5,9	6,3	6,0	RBR 1200 1355 063 CR
125,0	140,5	5,9	6,3	6,0	RBR 1250 1405 063 CR
150,0	165,5	5,9	6,3	6,0	RBR 1500 1655 063 CR
170,0	185,5	5,9	6,3	6,0	RBR 1700 1855 063 CR
180,0	195,5	5,9	6,3	6,0	RBR 1800 1955 063 CR
200,0	220,5	7,6	8,1	7,5	RBR 2000 2205 081 CR

CR = CO (TPU 93 shore A) + RO (POM)

Nota: altre dimensioni non a catalogo a richiesta. Consultare il nostro ufficio tecnico.

Remark: please contact our technical dept. for further dimensions not included in the catalogue.

OLEODINAMICA
HYDRAULIC



RPS

TENUTA STELO / PISTONE TIPO RPS

Descrizione

La guarnizione tipo RPS permette, grazie al suo profilo, due differenti montaggi ed applicazioni. Avendo due labbri simmetrici può essere utilizzata sia per tenuta su stelo che per tenuta su pistone e per cilindri che lavorano a semplice o a doppio effetto. Il profilo a labbri uguali e la profondità della gola garantiscono una ridotta frizione e un movimento lineare anche a bassa pressione.

Dati tecnici

Pressione:	< 400 bar a temperatura di 60° C
Velocità:	< 0,5 m/s
Temperatura:	da - 35° C a + 100° C con punte fino a 110° C
Fluidi:	oli idraulici minerali (vedi tabella 1 a pagina 12)

Materiali

Il materiale proposto è il poliuretano tipo C0 ad alto modulo elastico, basso compression-set e buona resistenza all'abrasione.
Ha una durezza di 93 Shore A ± 2.
Codice materiale: C0

Montaggio

Il montaggio è facilitato dall'alto modulo elastico del poliuretano.
E' consigliato ingrassare la guarnizione prima del montaggio, e togliere spigoli e bave che danneggerebbero la tenuta.

RPS TYPE ROD/PISTON SEAL

Description

The RPS seal type combines in one solution two different installations and applications.
With two symmetrical lips, it can be used both for rod and piston sealing applications and for cylinders working with simple or double effect.
The profile with equal lips and the deep groove ensures low friction and a linear movement even at low pressure.

Technical data

Pressure:	*< 400 bar at a temperature of 60° C*
Speed:	*< 0,5 m/s*
Temperature:	*from - 35° C to + 100° C, with peaks of + 110° C*
Fluids:	*mineral hydraulic oils (see table 1, page 12)*

Material

The proposed material is a "C0" type polyurethane, with high elasticity modulus, fundamental for the sealing, low compression-set and high abrasion resistance.
The hardness is 93 Shore A ± 2.
Compound reference: C0

Assembling

The high modulus of elasticity of the polyurethane helps the assembling.
It is recommended to lubricate the seals before installation and to eliminate any edges or flash which could damage the seal.

RPS



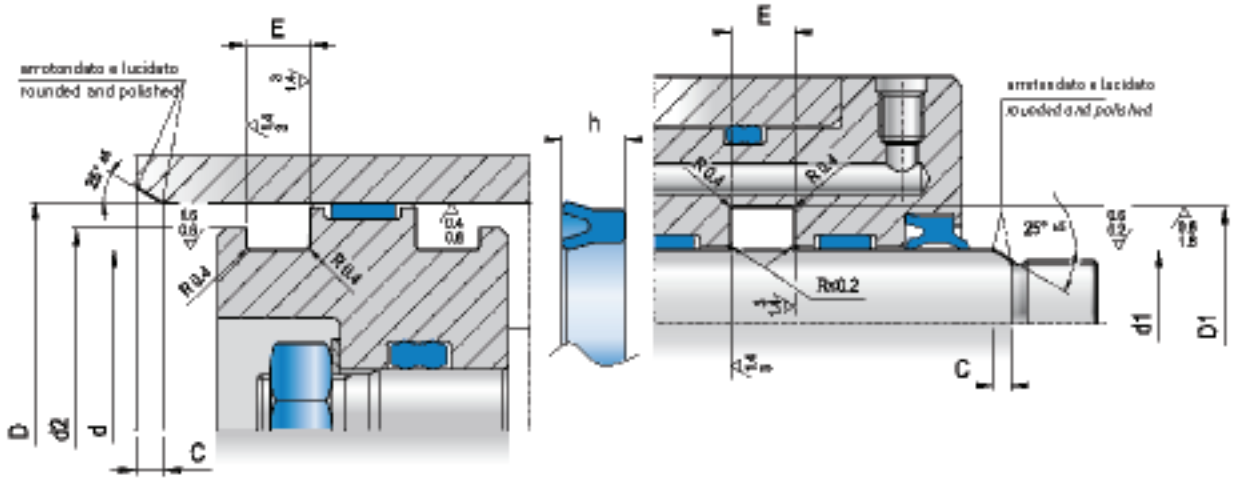

d_{h11} $d_{1\,h9}$	D_{H9} $D_{3\,H10}$	h	$E_{+0,2}$	d_2**	C	ART / *ITEM*
4,0	8,0	3,5	4,0	6,0	2,0	RPS 0040 0080 035 C0
4,0	10,0	4,0	4,5	7,0	3,0	RPS 0040 0100 040 C0
5,0	12,0	4,5	5,0	8,5	3,0	RPS 0050 0120 045 C0
5,0	12,0	5,0	5,5	8,5	3,0	RPS 0050 0120 050 C0
6,0	12,0	4,5	5,0	9,0	3,0	RPS 0060 0120 045 C0
6,0	12,0	5,5	6,0	9,0	3,0	RPS 0060 0120 055 C0
6,0	12,0	6,0	7,0	9,0	3,0	RPS 0060 0120 060 C0
7,0	14,0	3,5	4,0	10,5	4,0	RPS 0070 0140 035 C0
8,0	12,0	5,0	5,5	10,0	2,0	RPS 0080 0120 050 C0
8,0	14,0	5,5	6,0	11,0	3,0	RPS 0080 0140 055 C0
8,0	14,0	6,0	7,0	11,0	3,0	RPS 0080 0140 060 C0
8,0	15,0	5,7	6,3	11,0	4,0	RPS 0080 0150 057 C0
8,0	16,0	5,5	6,0	12,0	4,0	RPS 0080 0160 055 C0
8,0	16,0	5,7	6,3	12,0	3,5	RPS 0080 0160 057 C0
8,0	16,0	7,0	8,0	12,0	3,5	RPS 0080 0160 070 C0
9,0	19,0	6,0	7,0	14,0	4,0	RPS 0090 0190 060 C0
10,0	16,0	6,0	6,5	13,0	3,0	RPS 0100 0160 060 C0
10,0	18,0	5,5	6,0	14,0	3,5	RPS 0100 0180 055 C0
10,0	18,0	5,7	6,3	14,0	3,5	RPS 0100 0180 057 C0
10,0	18,0	6,0	7,0	14,0	3,5	RPS 0100 0180 060 C0
10,0	18,0	8,0	9,0	14,0	3,5	RPS 0100 0180 080 C0
10,0	19,0	3,2	3,5	14,5	4,0	RPS 0100 0190 032 C0
10,0	20,0	7,0	8,0	15,0	4,0	RPS 0100 0200 070 C0
10,0	20,0	8,0	9,0	15,0	4,0	RPS 0100 0200 080 C0

d_{h11} $d_{1\,h9}$	D_{H9} $D_{3\,H10}$	h	$E_{+0,2}$	d_2**	C	ART / *ITEM*
12,0	18,0	5,0	5,5	15,0	3,0	RPS 0120 0180 050 C0
12,0	18,0	6,0	7,0	15,0	3,0	RPS 0120 0180 060 C0
12,0	20,0	4,0	4,5	16,0	4,5	RPS 0120 0200 040 C0
12,0	20,0	7,0	8,0	16,0	3,5	RPS 0120 0200 070 C0
12,0	20,0	8,0	9,0	16,0	3,5	RPS 0120 0200 080 C0
12,0	22,0	5,0	6,0	17,0	4,0	RPS 0120 0220 050 C0
12,0	22,0	7,0	8,0	17,0	4,0	RPS 0120 0220 070 C0
12,0	22,0	8,0	9,0	17,0	4,0	RPS 0120 0220 080 C0
12,0	25,0	10,0	11,0	18,5	5,0	RPS 0120 0250 100 C0
14,0	20,0	4,8	5,3	17,0	3,0	RPS 0140 0200 048 C0
14,0	22,0	4,0	4,5	18,0	3,5	RPS 0140 0220 040 C0
14,0	22,0	6,0	7,0	18,0	3,5	RPS 0140 0220 060 C0
14,0	22,0	8,0	9,0	18,0	3,5	RPS 0140 0220 080 C0
14,0	22,0	11,0	12,0	18,0	3,5	RPS 0140 0220 110 C0
14,0	24,0	7,0	8,0	19,0	4,0	RPS 0140 0240 070 C0
14,0	24,0	8,0	9,0	19,0	4,0	RPS 0140 0240 080 C0
15,0	25,0	8,0	9,0	20,0	4,0	RPS 0150 0250 080 C0
15,0	25,0	10,0	11,0	20,0	4,0	RPS 0150 0250 100 C0
16,0	22,0	4,0	4,5	19,0	3,0	RPS 0160 0220 040 C0
16,0	22,0	5,0	5,5	19,0	3,0	RPS 0160 0220 050 C0
16,0	24,0	5,0	6,0	20,0	3,5	RPS 0160 0240 050 C0
16,0	24,0	5,7	6,3	20,0	3,5	RPS 0160 0240 057 C0
16,0	24,0	7,0	8,0	20,0	3,5	RPS 0160 0240 070 C0
16,0	26,0	5,0	6,0	21,0	4,0	RPS 0160 0260 050 C0

* in conformità alle norme ISO/DIN 5597 e ISO 5597/1 – *in accordance with ISO/DIN 5597 and ISO 5597/1 norms*

** diametro di aggancio consigliato ma modificabile in funzione delle esigenze di montaggio – *hook diameter which could be modified according to mounting demand*



RPS

d_{hss} d_{shp}	D_{hp} D_{shss}	h	$E_{+0,2}$	d_3**	C	ART / *ITEM*
16,0	26,0	8,0	9,0	21,0	4,0	RPS 0160 0260 080 C0
16,0	28,0	6,0	7,0	22,0	5,0	RPS 0160 0280 060 C0
17,0	25,0	10,0	11,0	21,0	3,0	RPS 0170 0250 100 C0
18,0	25,0	5,0	5,5	21,5	3,5	RPS 0180 0250 050 C0
18,0	26,0	6,5	7,5	22,0	3,5	RPS 0180 0260 065 C0
18,0	28,0	6,0	7,0	23,0	4,0	RPS 0180 0280 060 C0
18,0	28,0	8,0	9,0	23,0	4,0	RPS 0180 0280 080 C0
18,0	30,0	8,0	9,0	24,0	5,0	RPS 0180 0300 080 C0
19,0	25,0	6,0	7,0	22,0	3,0	RPS 0190 0250 060 C0
20,0	28,0	4,0	5,0	24,0	3,5	RPS 0200 0280 040 C0
20,0	28,0	4,5	5,0	24,0	3,5	RPS 0200 0280 045 C0
20,0	30,0	8,0	9,0	25,0	4,0	RPS 0200 0300 080 C0
20,0	30,0	10,0	11,0	25,0	4,0	RPS 0200 0300 100 C0
20,0	32,0	7,5	8,5	26,0	5,0	RPS 0200 0320 075 C0
20,0	35,0	12,0	13,0	27,5	5,0	RPS 0200 0350 120 C0
20,0	40,0	10,0	11,0	30,0	7,0	RPS 0200 0400 100 C0
20,0	40,0	12,0	13,0	30,0	7,0	RPS 0200 0400 120 C0
22,0	28,0	8,0	9,0	25,0	3,0	RPS 0220 0280 080 C0
22,0	30,0	6,0	7,0	26,0	3,5	RPS 0220 0300 060 C0
22,0	30,0	10,0	11,0	26,0	3,5	RPS 0220 0300 100 C0
22,0	32,0	8,0	9,0	27,0	4,0	RPS 0220 0320 080 C0
22,0	32,0	10,0	11,0	27,0	4,0	RPS 0220 0320 100 C0
22,0	35,0	10,0	11,0	28,5	5,0	RPS 0220 0350 100 C0
22,0	40,0	10,0	11,0	31,0	6,0	RPS 0220 0400 100 C0
24,0	32,0	7,0	8,0	28,0	3,5	RPS 0240 0320 070 C0
25,0	35,0	5,0	5,5	30,0	4,0	RPS 0250 0350 050 C0
25,0	35,0	8,0	9,0	30,0	4,0	RPS 0250 0350 080 C0
25,0	35,0	10,0	11,0	30,0	4,0	RPS 0250 0350 100 C0
25,0	38,0	10,0	11,0	31,5	5,0	RPS 0250 0380 100 C0
25,0	40,0	10,0	11,0	32,5	5,0	RPS 0250 0400 100 C0
28,0	35,0	5,0	5,5	31,5	3,0	RPS 0280 0350 050 C0
28,0	36,0	5,7	6,3	33,0	4,0	RPS 0280 0360 057 C0
28,0	36,0	6,5	7,5	32,0	3,5	RPS 0280 0360 065 C0
28,0	38,0	5,7	6,3	33,0	4,0	RPS 0280 0380 057 C0
28,0	38,0	8,0	9,0	33,0	4,0	RPS 0280 0380 080 C0
28,0	40,0	10,0	11,0	34,0	5,0	RPS 0280 0400 100 C0
30,0	38,0	6,0	6,5	34,0	4,0	RPS 0300 0380 060 C0
30,0	40,0	5,0	5,5	35,0	5,0	RPS 0300 0400 050 C0
30,0	40,0	7,0	8,0	35,0	5,0	RPS 0300 0400 070 C0
30,0	40,0	10,0	11,0	35,0	5,0	RPS 0300 0400 100 C0
30,0	42,0	9,0	10,0	36,0	5,5	RPS 0300 0420 090 C0
30,0	42,0	10,0	11,0	36,0	5,5	RPS 0300 0420 100 C0

d_{hss} d_{shp}	D_{hp} D_{shss}	h	$E_{+0,2}$	d_3**	C	ART / *ITEM*
30,0	45,0	10,0	11,0	37,5	6,0	RPS 0300 0450 100 C0
30,0	50,0	10,0	11,0	40,0	7,0	RPS 0300 0500 100 C0
30,0	50,0	12,0	13,0	40,0	7,0	RPS 0300 0500 120 C0
32,0	40,0	5,5	6,0	36,0	4,0	RPS 0320 0400 055 C0
32,0	40,0	5,7	6,3	36,0	4,0	RPS 0320 0400 057 C0
32,0	40,0	8,0	9,0	36,0	4,0	RPS 0320 0400 080 C0
32,0	42,0	7,0	8,0	37,0	5,0	RPS 0320 0420 070 C0
32,0	42,0	10,0	11,0	37,0	5,0	RPS 0320 0420 100 C0
32,0	45,0	10,0	11,0	38,5	5,5	RPS 0320 0450 100 C0
32,0	50,0	12,0	13,0	41,0	6,5	RPS 0320 0500 120 C0
35,0	45,0	8,0	9,0	40,0	5,0	RPS 0350 0450 080 C0
35,0	45,0	10,0	11,0	40,0	5,0	RPS 0350 0450 100 C0
35,0	48,0	10,0	11,0	41,5	5,5	RPS 0350 0480 100 C0
35,0	50,0	10,0	11,0	42,5	6,0	RPS 0350 0500 100 C0
35,0	55,0	10,0	11,0	45,0	7,0	RPS 0350 0550 100 C0
36,0	46,0	7,0	8,0	41,0	5,0	RPS 0360 0460 070 C0
38,0	45,0	5,0	5,5	41,5	3,5	RPS 0380 0450 050 C0
38,0	50,0	9,0	10,0	44,0	5,5	RPS 0380 0500 090 C0
38,0	55,0	10,0	11,0	46,5	6,5	RPS 0380 0550 100 C0
40,0	50,0	6,0	7,0	45,0	5,0	RPS 0400 0500 060 C0
40,0	50,0	6,5	7,5	45,0	5,0	RPS 0400 0500 065 C0
40,0	50,0	7,0	8,0	45,0	5,0	RPS 0400 0500 070 C0
40,0	50,0	8,0	9,0	45,0	5,0	RPS 0400 0500 080 C0
40,0	50,0	10,0	11,0	45,0	5,0	RPS 0400 0500 100 C0
40,0	55,0	10,0	11,0	47,5	6,0	RPS 0400 0550 100 C0
40,0	56,0	10,0	11,0	48,0	6,0	RPS 0400 0560 100 C0
40,0	60,0	10,0	11,0	50,0	7,0	RPS 0400 0600 100 C0
40,0	60,0	13,0	14,0	50,0	7,0	RPS 0400 0600 130 C0
42,0	52,0	9,0	10,0	47,0	5,0	RPS 0420 0520 090 C0
45,0	55,0	6,5	7,5	50,0	5,0	RSP 0450 0550 065 C0
45,0	55,0	10,0	11,0	50,0	5,0	RPS 0450 0550 100 C0
45,0	60,0	10,0	11,0	52,5	6,0	RPS 0450 0600 100 C0
45,0	63,0	10,0	11,0	54,0	6,5	RPS 0450 0630 100 C0
45,0	65,0	10,0	11,0	55,0	7,0	RPS 0450 0650 100 C0
45,0	65,0	12,0	13,0	55,0	7,0	RPS 0450 0650 120 C0
48,0	58,0	10,0	11,0	53,0	5,0	RPS 0480 0580 100 C0
50,0	60,0	10,0	11,0	55,0	5,0	RPS 0500 0600 100 C0
50,0	60,0	11,0	12,0	55,0	5,0	RPS 0500 0600 110 C0
50,0	63,0	6,0	7,0	56,5	5,5	RPS 0500 0630 060 C0
50,0	65,0	10,0	11,0	57,5	6,0	RPS 0500 0650 100 C0
50,0	70,0	10,0	11,0	60,0	7,0	RPS 0500 0700 100 C0
50,0	70,0	12,0	13,0	60,0	7,0	RPS 0500 0700 120 C0

* in conformità alle norme ISO/DIN 5597 e ISO 5597/1 – *in accordance with ISO/DIN 5597 and ISO 5597/1 norms*

** *diametro di aggancio consigliato ma modificabile in funzione delle esigenze di montaggio – hook diameter which could be modified according to mounting demand*

RPS



d_{H11} d_{cHg}	D_{Hg} D_{sH10}	h	$E_{+0,2}$	d_2**	C	ART / *ITEM*
53,0	63,0	6,5	7,5	58,0	5,0	RPS 0530 0630 065 C0
55,0	65,0	10,0	11,0	60,0	5,0	RPS 0550 0650 100 C0
55,0	65,0	12,0	13,0	60,0	5,0	RPS 0550 0650 120 C0
55,0	70,0	12,0	13,0	62,5	6,0	RPS 0550 0700 120 C0
55,0	75,0	12,0	13,0	65,0	7,0	RPS 0550 0750 120 C0
56,0	66,0	10,0	11,0	61,0	5,0	RPS 0560 0660 100 C0
56,0	71,0	10,0	11,0	63,5	6,0	RPS 0560 0710 100 C0
60,0	70,0	8,0	9,0	65,0	5,0	RPS 0600 0700 080 C0
60,0	70,0	10,0	11,0	65,0	5,0	RPS 0600 0700 100 C0
60,0	70,0	12,0	13,0	65,0	5,0	RPS 0600 0700 120 C0
60,0	75,0	10,0	11,0	67,5	6,0	RPS 0600 0750 100 C0
60,0	75,0	12,0	13,0	67,5	6,0	RPS 0600 0750 120 C0
60,0	80,0	10,0	11,0	70,0	7,0	RPS 0600 0800 100 C0
60,0	80,0	12,0	13,0	70,0	7,0	RPS 0600 0800 120 C0
63,0	75,0	10,0	11,0	69,0	5,5	RPS 0630 0750 100 C0
63,0	78,0	10,0	11,0	70,5	6,0	RPS 0630 0780 100 C0
63,0	80,0	10,0	11,0	71,5	6,5	RPS 0630 0800 100 C0
65,0	75,0	12,0	13,0	70,0	5,0	RPS 0650 0750 120 C0
65,0	80,0	10,0	11,0	72,5	6,0	RPS 0650 0800 100 C0
65,0	80,0	11,0	12,0	72,5	6,0	RPS 0650 0800 110 C0
65,0	80,0	12,0	13,0	72,5	6,0	RPS 0650 0800 120 C0
65,0	85,0	10,0	11,0	75,0	7,0	RPS 0650 0850 100 C0
65,0	85,0	12,0	13,0	75,0	7,0	RPS 0650 0850 120 C0
66,0	76,0	8,0	9,0	71,0	5,0	RPS 0660 0760 080 C0
67,0	77,0	12,0	13,0	72,0	5,0	RPS 0670 0770 120 C0
70,0	80,0	7,0	8,0	75,0	5,0	RPS 0700 0800 070 C0
70,0	80,0	8,0	9,0	75,0	5,0	RPS 0700 0800 080 C0
70,0	80,0	10,0	11,0	75,0	5,0	RPS 0700 0800 100 C0
70,0	80,0	12,0	13,0	75,0	5,0	RPS 0700 0800 120 C0
70,0	85,0	10,0	11,0	77,5	6,0	RPS 0700 0850 100 C0
70,0	85,0	12,0	13,0	77,5	6,0	RPS 0700 0850 120 C0
70,0	90,0	10,0	11,0	80,0	7,0	RPS 0700 0900 100 C0
70,0	90,0	12,0	13,0	80,0	7,0	RPS 0700 0900 120 C0
75,0	85,0	10,0	11,0	80,0	5,0	RPS 0750 0850 100 C0
75,0	85,0	12,0	13,0	80,0	5,0	RPS 0750 0850 120 C0
75,0	90,0	10,0	11,0	82,5	6,0	RPS 0750 0900 100 C0
75,0	90,0	12,0	13,0	82,5	6,0	RPS 0750 0900 120 C0
75,0	95,0	12,0	13,0	85,0	7,0	RPS 0750 0950 120 C0
75,0	95,0	13,5	14,5	85,0	7,0	RPS 0750 0950 135 C0
80,0	90,0	7,0	8,0	85,0	5,0	RPS 0800 0900 070 C0
80,0	90,0	10,0	11,0	85,0	5,0	RPS 0800 0900 100 C0
80,0	90,0	12,0	13,0	85,0	5,0	RPS 0800 0900 120 C0

d_{H11} d_{cHg}	D_{Hg} D_{sH10}	h	$E_{+0,2}$	d_2**	C	ART / *ITEM*
80,0	95,0	12,0	13,0	87,5	6,0	RPS 0800 0950 120 C0
80,0	100,0	10,0	11,0	90,0	7,0	RPS 0800 1000 100 C0
80,0	100,0	12,0	13,0	90,0	7,0	RPS 0800 1000 120 C0
85,0	95,0	8,5	9,5	90,0	5,0	RPS 0850 0950 085 C0
85,0	95,0	12,0	13,0	90,0	5,0	RPS 0850 0950 120 C0
85,0	100,0	9,0	10,0	92,5	6,0	RPS 0850 1000 090 C0
85,0	100,0	12,0	13,0	92,5	6,0	RPS 0850 1000 120 C0
85,0	105,0	12,0	13,0	95,0	7,0	RPS 0850 1050 120 C0
90,0	100,0	7,0	8,0	95,0	5,0	RPS 0900 1000 070 C0
90,0	100,0	8,0	9,0	95,0	5,0	RPS 0900 1000 080 C0
90,0	100,0	10,5	11,5	95,0	5,0	RPS 0900 1000 105 C0
90,0	100,0	12,0	13,0	95,0	5,0	RPS 0900 1000 120 C0
90,0	105,0	12,0	13,0	97,5	6,0	RPS 0900 1050 120 C0
90,0	110,0	12,0	13,0	100,0	7,0	RPS 0900 1100 120 C0
90,0	110,0	18,0	19,0	100,0	7,0	RPS 0900 1100 180 C0
95,0	105,0	12,0	13,0	100,0	5,0	RPS 0950 1050 120 C0
95,0	110,0	12,0	13,0	102,5	6,0	RPS 0950 1100 120 C0
95,0	110,0	12,5	13,5	102,5	6,0	RPS 0950 1100 125 C0
95,0	110,0	15,0	16,0	102,5	6,0	RPS 0950 1100 150 C0
95,0	112,0	11,0	12,0	103,5	6,5	RPS 0950 1120 110 C0
95,0	115,0	12,0	13,0	105,0	7,0	RPS 0950 1150 120 C0
95,0	115,0	18,0	19,0	105,0	7,0	RPS 0950 1150 180 C0
100,0	115,0	12,0	13,0	107,5	6,0	RPS 1000 1150 120 C0
100,0	120,0	12,0	13,0	110,0	7,0	RPS 1000 1200 120 C0
100,0	125,0	15,0	16,0	112,5	8,0	RPS 1000 1250 150 C0
105,0	125,0	12,0	13,0	115,0	7,0	RPS 1050 1250 120 C0
105,0	125,0	15,0	16,0	115,0	7,0	RPS 1050 1250 150 C0
110,0	130,0	15,0	16,0	120,0	7,0	RPS 1100 1300 150 C0
125,0	140,0	15,0	16,0	132,5	6,0	RPS 1250 1400 150 C0
170,0	190,0	15,0	16,0	180,0	7,0	RPS 1700 1900 150 C0
200,0	220,0	12,0	13,0	210,0	7,0	RPS 2000 2200 120 C0

Per diametri superiori a 200mm sono disponibili le tenute tipo MAD e tipo CSC della Macma.

Seals type MAD and type CSC, produced by Macma, are available for diameters bigger than 200 mm.

* in conformità alle norme ISO/DIN 5597 e ISO 5597/1 – *in accordance with ISO/DIN 5597 and ISO 5597/1 norms*

** *diametro di aggancio consigliato ma modificabile in funzione delle esigenze di montaggio – hook diameter which could be modified according to mounting demand*

Montaggio - PTFE

Assembling - PTFE

Fig. 10

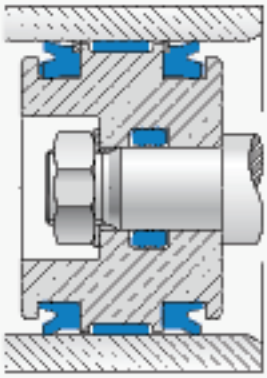

Due guarnizioni contrapposte tipo PAE con anello antiestrusione con interposto un anello di guida tipo HES. Entrambi i tipi di tenuta sono costruiti con tacche di sfiato sul dorso, dal lato esterno, necessarie affinchè non si crei una pressione residua tra le due guarnizioni, di valore crescente che nel medio/lungo termine potrebbe espellerne una dalla sede.

Two opposed PAE-type seals with anti-extrusion ring and an HES wear ring in between. Both seal types have been developed with notches on the external side to prevent residual pressure between the two seals. Pressure would keep rising and in mid / long-term could cause seal extrusion.

Fig. 11

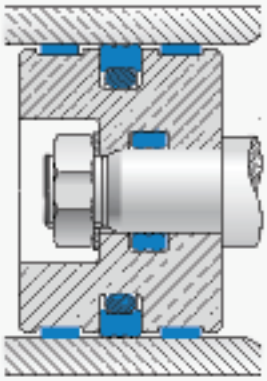

Montaggio semplice, ma molto efficace di una guarnizione tipo PSO con anello di tenuta in poliuretano in accoppiamento a due anelli di guida tipo HES. In alternativa per alte pressioni e giochi di accoppiamento elevati utilizzare tenute in PTFE.

Easy assembling of a PSO seal type, with polyurethane sealing ring combined to two HES wear rings.
As alternative for high pressures and high clearance, PTFE seals can be used.

Fig. 12

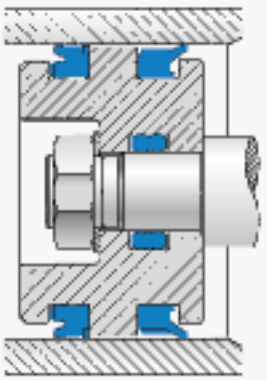

Impiego di guarnizione tipo PAE provvista di anello antiestrusione ed anello raschiatore tipo WEL. Quest'ultimo è consigliato in tutti i cilindri a semplice effetto dove è facile che sul lato asciutto della canna si formi condensa o si depositino particelle metalliche di lavorazione, entrambi agenti di deterioramento della tenuta.

Use of PAE seals with anti-extrusion ring and WEL type wiper ring. This last one is suggested for all simple effect cylinders where condensation can form or tooling metal particles can accumulate on the dry side of the tube, thus damaging the seal.

MONTAGGIO TENUTA PISTONE - PTFE

Le guarnizioni PTFE necessitano di precauzioni estremamente rigorose, maggiori che per tutte le altre tipologie di tenuta. E' fondamentale eliminare gli spigoli vivi e le bave nelle sedi. Il montaggio delle guarnizioni per stelo segue normalmente questa sequenza:

- Installare O-Ring nella sede;
- Spingere dilatando l'anello in PTFE, con l'ausilio di un mandrino ed una bussola ad espansione (Fig.13);
- Calibrare con una bussola opportunamente dimensionata (Fig.14)

ASSEMBLING OF PISTON SEAL - PTFE

PTFE seals require careful assembling operations in comparison to other types of seals it is necessary to remove flashes and/or cutting edges in the grooves. The rod seal is usually assembled in the following Sequence:

- *fit the O-Ring into the groove*
- *twist the PTFE ring using a mandrel and a expansion bush (Fig.13);*
- *calibrate with a bush with right dimension (Fig.14)*

Fig. 13

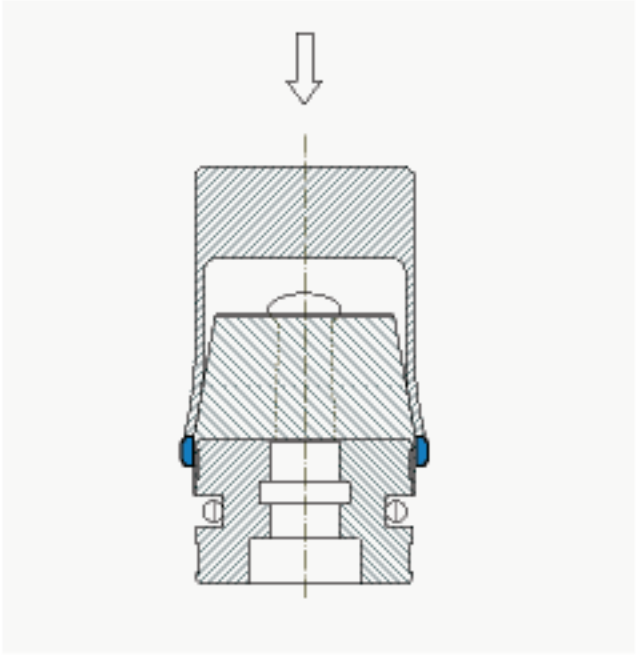

Fig. 14

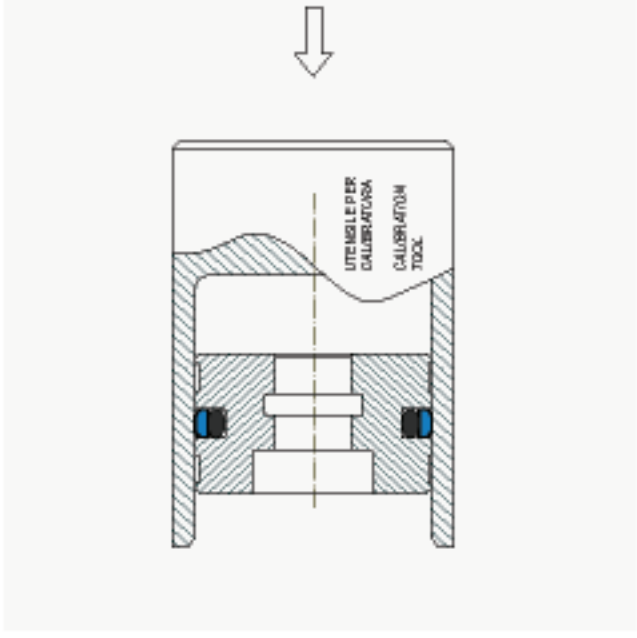



PSA

TENUTA PISTONE TIPO PSA

Descrizione

La guarnizione tipo PSA è stata realizzata per impieghi su pistone e può essere utilizzata sia peril semplice che per il doppio effetto.
Ha labbri asimmetrici che assicurano sempre il contatto con la camicia anche con dei disallineàmenti elevati.
Il montaggio avviene in cava semiaperta per accavallamento, avendo il materiale un alto modulo elastico.

Dati tecnici

Pressione:	< 400 bar a temperatura di 60° C
Velocità:	< 0.5 m/s
Temperatura:	da - 35° C a + 100° C con punte fino a 110° C
Fluidi:	oli a base minerale (vedi tabella 1 a pagina 12)

Materiale

Il materiale proposto è il poliuretano tipo C0 ad alto modulo elastico, basso compression-set ed alta resistenza all'usura.
Ha una durezza di 93 Shore A ± 2.
Codice materiale: C0

Montaggio

Eliminare tutti gli spigoli vivi e le bave sul pistone dove alloggia la guarnizione.
Eseguire uno smusso di invito sulla camicia per facilitare l'inserimento del pistone.
Lubrificare la tenuta prima del montaggio.
Per ulteriori informazioni leggere le istruzioni di montaggio a pag. 26.

PSA TYPE PISTON SEAL

Description

The PSA seal type has been conceived to work on the piston and it can be used for simple or double effet.
Its has asymmetrical lips which ensure a continuous contact with the bore, even in case of high misalignments.
The installation is done in semi-open groove by overlapping, since the material has a high modulus of elasticity.

Technical data

Pressure:	*< 400 bar at a temperature of 60° C*
Speed:	*< 0.5 m/s*
Temperature:	*from - 35° C to + 100° C, with peaks til 110° C*
Fluids:	*mineral-based oils and fuels (see table 1, page 12)*

Material

The material used is a polyurethane with a high modulus of elasticity, low compression set and high wear resistance.
Its hardness is 93 Shore A ± 2.
Compound reference: C0

Assembling

Remove any flash or cutting edges on the piston where the seal is housed.
Provide a lead-in chamfer in the bore to have an easier piston insertion.
Lubricate the packing before installation.
For further information please refer to the installation instructions on page 26.

PSA



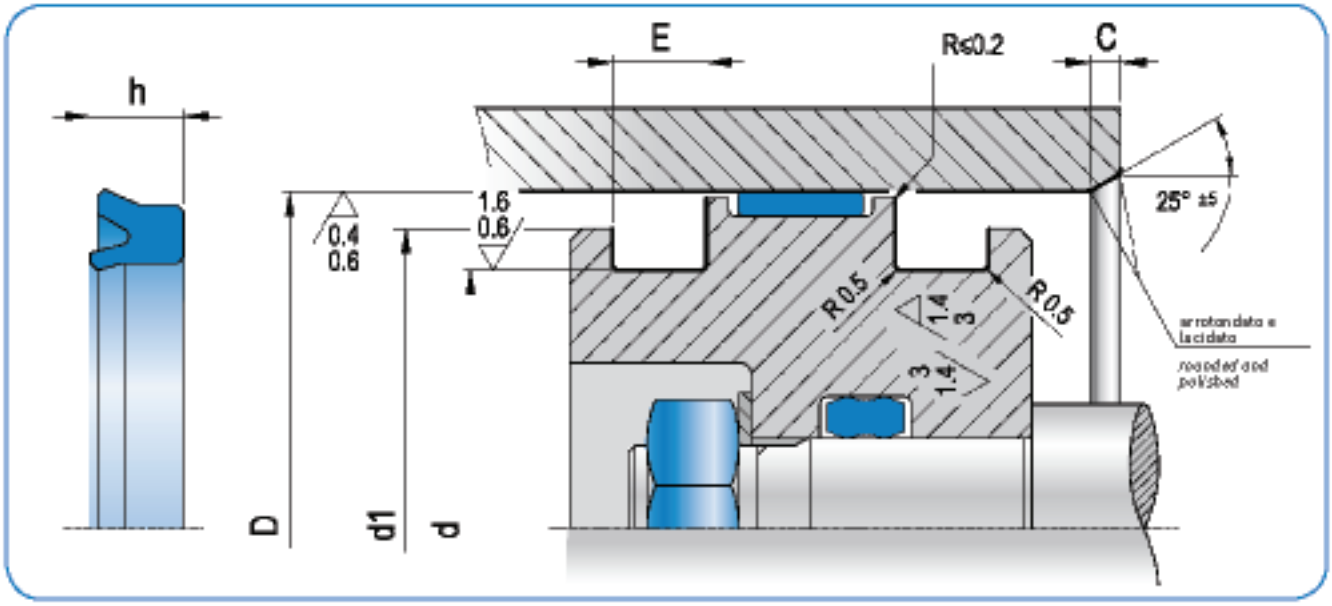

D_{H9}	d_{h9}	h	$E_{+0,2}$	d_1*	C	ART / *ITEM*
20,0	12,0	6,5	7,5	15,0	4,0	PSA 0200 0120 065 C0
20,0	14,0	5,5	6,0	17,0	3,5	PSA 0200 0140 055 C0
22,0	12,0	8,0	9,0	16,0	5,0	PSA 0220 0120 080 C0
25,0	15,0	8,0	9,0	19,0	5,0	PSA 0250 0150 080 C0
30,0	20,0	8,0	9,0	24,0	5,0	PSA 0300 0200 080 C0
30,0	22,0	6,5	7,0	26,0	5,0	PSA 0300 0220 065 C0
32,0	22,0	10,0	11,0	26,0	5,0	PSA 0320 0220 100 C0
32,0	24,0	5,7	6,3	28,0	4,0	PSA 0320 0240 057 C0
32,0	26,0	5,0	6,0	28,0	3,5	PSA 0320 0260 050 C0
35,0	20,0	10,0	11,0	25,0	5,5	PSA 0350 0200 100 C0
35,0	25,0	8,0	9,0	29,0	5,0	PSA 0350 0250 080 C0
37,0	21,0	12,0	13,0	25,0	6,0	PSA 0370 0210 120 C0
40,0	25,0	10,0	11,0	30,0	6,0	PSA 0400 0250 100 C0
40,0	30,0	6,5	7,5	34,0	5,0	PSA 0400 0300 065 C0
40,0	30,0	10,0	11,0	34,0	5,0	PSA 0400 0300 100 C0
40,0	32,0	5,5	6,5	36,0	4,0	PSA 0400 0320 055 C0
40,0	32,0	8,0	9,0	36,0	4,0	PSA 0400 0320 080 C0
42,0	32,0	10,0	11,0	36,0	5,0	PSA 0420 0320 100 C0
45,0	30,0	10,0	11,0	35,0	6,0	PSA 0450 0300 100 C0
50,0	30,0	12,0	13,0	35,0	7,0	PSA 0500 0300 120 C0
50,0	32,0	10,0	11,0	37,0	6,5	PSA 0500 0320 100 C0
50,0	35,0	8,5	9,5	40,0	6,0	PSA 0500 0350 085 C0
50,0	35,0	10,0	11,0	40,0	6,0	PSA 0500 0350 100 C0
50,0	40,0	5,0	5,5	44,0	5,0	PSA 0500 0400 050 C0
50,0	40,0	10,0	11,0	44,0	5,0	PSA 0500 0400 100 C0
50,0	42,0	5,5	6,0	45,0	4,0	PSA 0500 0420 055 C0
50,0	42,0	8,0	9,0	45,0	4,0	PSA 0500 0420 080 C0

D_{H9}	d_{h9}	h	$E_{+0,2}$	d_1*	C	ART / *ITEM*
55,0	40,0	10,0	11,0	45,0	6,0	PSA 0550 0400 100 C0
60,0	40,0	12,0	13,0	45,0	7,0	PSA 0600 0400 120 C0
60,0	45,0	10,0	11,0	50,0	6,0	PSA 0600 0450 100 C0
60,0	50,0	7,0	8,0	54,0	5,0	PSA 0600 0500 070 C0
60,0	50,0	10,0	11,0	54,0	5,0	PSA 0600 0500 100 C0
63,0	43,0	12,0	13,0	47,0	7,0	PSA 0630 0430 120 C0
63,0	45,0	12,0	13,0	50,0	6,0	PSA 0630 0450 120 C0
63,0	48,0	6,5	7,5	53,0	6,5	PSA 0630 0480 065 C0
63,0	48,0	10,0	11,0	53,0	6,0	PSA 0630 0480 100 C0
63,0	48,0	12,0	13,0	53,0	6,0	PSA 0630 0480 120 C0
63,0	53,0	7,0	8,0	57,0	5,0	PSA 0630 0530 070 C0
63,0	53,0	12,0	13,0	57,0	5,0	PSA 0630 0530 120 C0
65,0	45,0	12,0	13,0	50,0	7,0	PSA 0650 0450 120 C0
65,0	50,0	10,0	11,0	55,0	6,0	PSA 0650 0500 100 C0
70,0	50,0	12,0	13,0	55,0	7,0	PSA 0700 0500 120 C0
70,0	55,0	9,5	10,5	60,0	6,0	PSA 0700 0550 095 C0
70,0	55,0	12,0	13,0	60,0	6,0	PSA 0700 0550 120 C0
70,0	60,0	7,0	8,0	64,0	5,0	PSA 0700 0600 070 C0
70,0	60,0	12,0	13,0	64,0	5,0	PSA 0700 0600 120 C0
70,0	62,0	7,5	8,5	65,0	4,5	PSA 0700 0620 075 C0
75,0	55,0	13,5	14,5	60,0	7,0	PSA 0750 0550 135 C0
75,0	65,0	7,0	8,0	69,0	5,0	PSA 0750 0650 070 C0
75,0	65,0	10,0	11,0	69,0	5,0	PSA 0750 0650 100 C0
80,0	60,0	12,0	13,0	65,0	7,0	PSA 0800 0600 120 C0
80,0	65,0	12,0	13,0	70,0	6,0	PSA 0800 0650 120 C0
80,0	68,0	8,5	9,5	72,0	5,5	PSA 0800 0680 085 C0
80,0	70,0	7,0	8,0	74,0	5,0	PSA 0800 0700 070 C0

* diametro di aggancio consigliato ma modificabile in funzione delle esigenze di montaggio

recommended hook diameter which could be modified according to mounting demand



PSA

D_{H9}	d_{h9}	h	$E_{\pm 0,2}$	d_1*	C	ART / *ITEM*
80,0	**70,0**	**12,0**	**13,0**	**74,0**	**5,0**	PSA 0800 0700 120 C0
85,0	**65,0**	**12,0**	**13,0**	**78,0**	**7,0**	PSA 0850 0650 120 C0
85,0	**65,0**	**13,5**	**14,5**	**78,0**	**7,0**	PSA 0850 0650 135 C0
85,0	**70,0**	**12,0**	**13,0**	**75,0**	**6,0**	PSA 0850 0700 120 C0
85,0	**75,0**	**10,0**	**11,0**	**79,0**	**5,0**	PSA 0850 0750 100 C0
90,0	**70,0**	**12,0**	**13,0**	**75,0**	**7,0**	PSA 0900 0700 120 C0
90,0	**70,0**	**13,5**	**14,5**	**75,0**	**7,0**	PSA 0900 0700 135 C0
90,0	**75,0**	**12,0**	**13,0**	**80,0**	**6,0**	PSA 0900 0750 120 C0
90,0	**80,0**	**10,0**	**11,0**	**84,0**	**5,0**	PSA 0900 0800 100 C0
95,0	**80,0**	**12,0**	**13,0**	**85,0**	**6,0**	PSA 0950 0800 120 C0
95,0	**85,0**	**7,0**	**8,0**	**89,0**	**5,0**	PSA 0950 0850 070 C0
100,0	**80,0**	**10,0**	**11,0**	**85,0**	**7,0**	PSA 1000 0800 100 C0
100,0	**80,0**	**12,0**	**13,0**	**85,0**	**7,0**	PSA 1000 0800 120 C0
100,0	**85,0**	**12,0**	**13,0**	**90,0**	**6,0**	PSA 1000 0850 120 C0
100,0	**88,0**	**8,5**	**9,5**	**93,0**	**5,5**	PSA 1000 0880 085 C0
100,0	**90,0**	**7,0**	**8,0**	**94,0**	**5,0**	PSA 1000 0900 070 C0
105,0	**90,0**	**12,0**	**13,0**	**95,0**	**6,0**	PSA 1050 0900 120 C0
110,0	**90,0**	**12,0**	**13,0**	**95,0**	**7,0**	PSA 1100 0900 120 C0

D_{H9}	d_{h9}	h	$E_{\pm 0,2}$	d_1*	C	ART / *ITEM*
110,0	**95,0**	**12,0**	**13,0**	**100,0**	**6,0**	PSA 1100 0950 120 C0
115,0	**95,0**	**15,0**	**16,0**	**105,0**	**7,0**	PSA 1150 0950 150 C0
115,0	**100,0**	**12,0**	**13,0**	**105,0**	**6,0**	PSA 1150 1000 120 C0
120,0	**100,0**	**12,0**	**13,0**	**105,0**	**7,0**	PSA 1200 1000 120 C0
120,0	**105,0**	**12,0**	**13,0**	**110,0**	**6,0**	PSA 1200 1050 120 C0
125,0	**100,0**	**15,0**	**16,0**	**105,0**	**8,0**	PSA 1250 1000 150 C0
125,0	**105,0**	**12,0**	**13,0**	**110,0**	**7,0**	PSA 1250 1050 120 C0
125,0	**105,0**	**15,0**	**16,0**	**110,0**	**7,0**	PSA 1250 1050 150 C0
125,0	**110,0**	**10,0**	**11,0**	**115,0**	**6,0**	PSA 1250 1100 100 C0
130,0	**110,0**	**15,0**	**16,0**	**115,0**	**7,0**	PSA 1300 1100 150 C0
140,0	**120,0**	**12,0**	**13,0**	**125,0**	**7,0**	PSA 1400 1200 120 C0
150,0	**130,0**	**15,0**	**16,0**	**135,0**	**7,0**	PSA 1500 1300 150 C0
160,0	**140,0**	**11,5**	**12,5**	**145,0**	**7,0**	PSA 1600 1400 115 C0
160,0	**140,0**	**15,0**	**16,0**	**145,0**	**7,0**	PSA 1600 1400 150 C0
180,0	**160,0**	**11,5**	**12,5**	**165,0**	**7,0**	PSA 1800 1600 115 C0
180,0	**160,0**	**15,0**	**16,0**	**165,0**	**7,0**	PSA 1800 1600 150 C0
200,0	**170,0**	**19,0**	**20,0**	**175,0**	**8,0**	PSA 2000 1700 190 C0
250,0	**220,0**	**19,0**	**20,0**	**225,0**	**8,0**	PSA 2500 2200 190 C0

* diametro di aggancio consigliato ma modificabile in funzione delle esigenze di montaggio
recommended hook diameter which could be modified according to mounting demand

Nota: altre dimensioni non a catalogo a richiesta Consultare il nostro ufficio tecnico.
Remark: please contact our technical dept. for fulter dimensions not included in the catalogue.

PSA





PAE

TENUTA PISTONE CON ANELLO ANTIESTRUSIONE TIPO PAE

Descrizione

La guarnizione tipo PAE è stata realizzata specificatamente per operare in condizioni di esercizio molto gravose.
Quando i giochi di accoppiamento tra camicia e pistone non possono essere ridotti e la pressione è molto elevata, superiore a 250 bar, la tenuta tipo PAE, grazie ad un robusto anello antiestrusione, risulta tra le più appropriate.

Dati tecnici

Pressione:	< 400 bar a temperatura di 60° C
Velocità:	< 0.5 m/s
Temperatura:	da - 35° C a +100° C con punte fino a 110° C
Fluidi:	Oli a base minerale (vedi tabella 1 a pagina 12)

Materiale

I materiali utilizzati sono un poliuretano tipo C0 a 93 Shore A ad alto modulo elastico per la guarnizione e una resina acetalica tipo R0 rinforzata con fibre di vetro con elevata resistenza al carico di rottura per l'anello antiestrusione.
Codice materiale: CR

Montaggio

Il montaggio di questa guarnizione avviene in cava semiaperta.
La sequenza prevede prima la tenuta e poi l'anello antiestrusione.
E' importante togliere le bave e gli spigoli vivi del pistone per non danneggiare la guarnizione durante il montaggio nella fase di accavallamento.

PAE TYPE PISTON SEAL WITH ANTIEXTRUSION RING

Description

The PAE seal type is specially designed for heavy duty applications.
When the coupling clearance between bore and piston cannot be reduced and the pressure is very high - above 250 bar - the PAE seal type, thanks to a strong anti-extrusion ring, is among the most appropriate of seal types.

Technical data

Pressure:	*< 400 bar at a temperature of 60° C*
Speed:	*< 0.5 m/s*
Temperature:	*from - 35° C till +100° C*
Fluids:	*mineral oils (see table 1, page 12)*

Material

The material used for the seal is polyurethane C0-type at 93 Shore A with high elasticity module. The anti-extrusion ring is made of acetylic resin R0-type reinforced with fibreglass and with high tensile strength.
Compound reference: CR

Assembling

The assembling of this seal is done in semi-open groove.
The anti-extrusion ring should be installed after the seal.
It is important to remove any flash or cutting edges on the piston not to damage the seal during the overlapping.

PAE



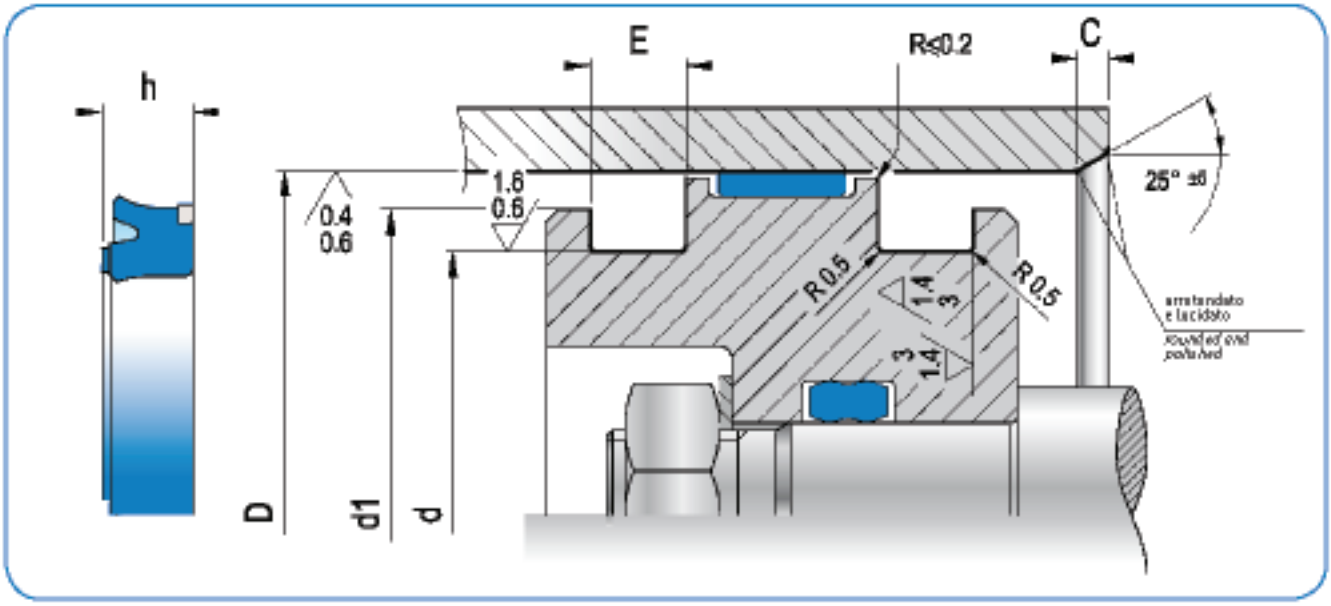

D_{H9}	d_{h9}	d_1*	h	$E_{+0,2}$	C	ART / *ITEM*
40,0	25,0	35,0	9,3	9,5	4,0	PAE 0400 0250 093 CR
45,0	30,0	40,0	9,3	9,5	4,0	PAE 0450 0300 093 CR
50,0	35,0	45,0	9,3	9,5	4,0	PAE 0500 0350 093 CR
55,0	40,0	50,0	9,3	9,5	4,0	PAE 0550 0400 093 CR
60,0	45,0	55,0	9,3	9,5	4,0	PAE 0600 0450 093 CR
63,0	48,0	58,0	9,3	9,5	4,0	PAE 0630 0480 093 CR
65,0	50,0	60,0	9,3	9,5	4,0	PAE 0650 0500 093 CR
70,0	50,0	64,0	12,2	12,5	5,0	PAE 0700 0500 122 CR
75,0	55,0	69,0	12,2	12,5	5,0	PAE 0750 0550 122 CR
80,0	60,0	74,0	12,2	12,5	5,0	PAE 0800 0600 122 CR
85,0	70,0	80,0	9,3	9,5	4,0	PAE 0850 0700 093 CR
90,0	70,0	84,0	12,2	12,5	5,0	PAE 0900 0700 122 CR

D_{H9}	d_{h9}	d_1*	h	$E_{+0,2}$	C	ART / *ITEM*
100,0	80,0	94,0	12,2	12,5	5,0	PAE 1000 0800 122 CR
105,0	85,0	99,0	12,2	12,5	5,0	PAE 1050 0850 122 CR
110,0	90,0	104,0	12,2	12,5	5,0	PAE 1100 0900 122 CR
115,0	95,0	109,0	12,2	12,5	5,0	PAE 1150 0950 122 CR
125,0	100,0	117,0	15,2	16,2	6,5	PAE 1250 1000 152 CR
125,0	105,0	119,0	12,2	12,5	5,0	PAE 1250 1050 122 CR
130,0	110,0	124,0	12,2	12,5	5,0	PAE 1300 1100 122 CR
140,0	115,0	132,0	15,2	16,2	6,5	PAE 1400 1150 152 CR
140,0	120,0	134,0	12,2	12,5	5,0	PAE 1400 1200 122 CR

* diametro di aggancio consigliato ma modificabile in funzione delle esigenze di montaggio
recommended hook diameter which could be modified according to mounting demand

Nota: altre dimensioni non a catalogo a richiesta. Consultare il nostro ufficio tecnico.
Remark: please contact our technical dept. for further dimensions not included in the catalogue.



PSH+RR

TENUTA PISTONE CON ANELLO GUIDA E RITEGNO TIPO PSH + RR

Descrizione

La guarnizione per pistone tipo PSH è simile al tipo PSA, ma è provvista di un anello di guida in resina acetalica che oltre ad attenuare eventuali disallineamenti funge anche da antiestrusione.
Un anello di ritegno tipo RR in resina termoplastica non consente l'espulsione della tenuta durante l'inversione del ciclo.

Dati tecnici

Pressione:	< 400 bar a temperatura di 60° C
Velocità:	< 0.5 m/s
Temperatura:	da - 35° C a + 100° C con punte fino a +110° C
Fluidi:	fluidi e oli a base minerale (vedi tabella 1 a pagina 12)

Materiale

Il materiale proposto è il poliuretano tipo C0 ad alto modulo elastico, a basso compression-set ed elevata resistenza all'abrasione; l'anello di guida è in resina acetalica tipo R0 rinforzata con fibre di vetro.
Codice materiale PSH: CR
L'anello di ritegno è costruito in resina termoplastica tipo R2.
Codice materiale RR: R2

Montaggio

Eliminare tutti gli spigoli vivi e le bave sul pistone dove alloggia la guarnizione.
Eseguire uno smusso di invito sulla camicia per facilitare l'inserimento del pistone.
Lubrificare la tenuta prima del montaggio.
Per ulteriori informazioni leggere le istruzioni di montaggio a pag. 26.

PSH+RR TYPE PISTON SEAL WITH WEAR AND RETAINING RING

Description

The PSH piston seal type is similar to the PSA type but it has an acetylic resin wear ring to mitigate possible misalignments and avoid extrusion.
A RR retaining ring made of thermoplastic resin prevents seal extrusion during the cycle inversion.

Technical data

Pressure:	*< 400 bar at a temperature of 60° C*
Speed:	*< 0.5 m/s*
Temperature:	*from - 35° C to + 100° C with peaks till +110° C*
Fluids:	*mineral fluids and oils (see table 1, page 12)*

Material

The proposed material is a C0-type polyurethane with high modulus of elasticity, low compression set and high abrasion resistance. The wear ring is made of a R0-type acetylic resin reinforced with fibreglass.
Compound reference PSH: CR
The retaining seal is made of thermoplastic resin R2 type.
Compound reference RR: R2

Assembling

Avoid all cutting edges and flash on the piston where the seal is housed.
A lead-in chamfer in the groove will facilitate the piston insertion.
Lubricate the seal before installation.
For further information please refer to the installation instructions on page 26.

PSH+RR



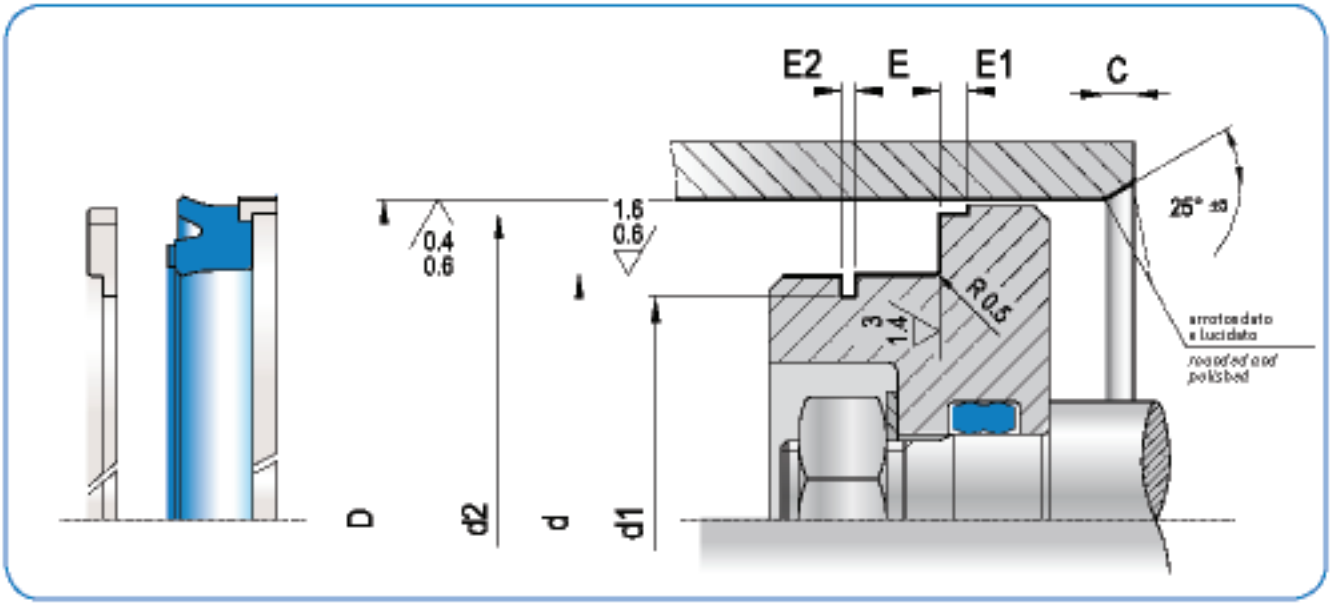

D_{H9}	d_{h9}	E +0,2	E_2 +0,1 +0,2	d_2 0/-0,05	E_1 ±0,1	C	d_3 ±0,1	ART / *ITEM*	ART / *ITEM*
32,0	20,0	10,0	3,10	28,50	6,35	4,0	15,80	PSH 0320 0200 100 CR	RR 0320 0200 R2
35,0	22,0	10,0	3,10	31,40	6,35	4,0	17,80	PSH 0350 0220 100 CR	RR 0350 0220 R2
40,0	26,0	9,4	3,10	35,40	6,35	4,0	21,60	PSH 0400 0260 094 CR	RR 0400 0260 R2
45,0	30,0	9,5	3,10	40,40	6,35	4,0	25,80	PSH 0450 0300 095 CR	RR 0450 0300 R2
50,0	30,0	14,5	3,35	44,30	6,35	4,0	25,80	PSH 0500 0300 145 CR	RR 0500 0300 R2
50,0	35,0	11,0		45,35	6,35	4,0		PSH 0500 0350 110 CR	
55,0	40,0	11,0	3,10	50,36	6,35	4,0	35,80	PSH 0550 0400 110 CR	RR 0550 0400 R2
60,0	40,0	14,5	3,35	55,40	6,35	4,0	36,10	PSH1 0600 0400 145 CR	RR 0600 0400 R2
60,0	40,0	14,5	3,35	54,20	6,35	4,0	36,10	PSH 0600 0400 145 CR	RR 0600 0400 R2
60,0	45,0	11,0		54,20	6,35	4,0		PSH 0600 0450 110 CR	
63,0	45,0	10,5	3,10	58,40	6,35	4,0	40,84	PSH 0630 0450 105 CR	RR 0630 0450 R2
70,0	50,0	14,5	3,35	64,20	6,35	5,0	45,84	PSH 0700 0500 145 CR	RR 0700 0500 R2
75,0	55,0	14,5	3,35	69,20	6,35	5,0	51,10	PSH 0750 0550 145 CR	RR 0750 0550 R2
90,0	70,0	14,5	3,35	84,15	6,35	5,0	66,10	PSH 0900 0700 145 CR	RR 0900 0700 R2
95,0	75,0	14,5	3,35	89,15	6,35	5,0	71,10	PSH 0950 0750 145 CR	RR 0950 0750 R2

Nota: altre dimensioni non a catalogo a richiesta. Consultare il nostro ufficio tecnico.

Remark: please contact our technical dept. for further dimensions not included in the catalogue.



PSO

TENUTA PISTONE TIPO PSO

Descrizione

La guarnizione tipo PSO ha un profilo con doppie punte sulla parte dinamica e un piano con due piccoli gradini di contenimento sulla parte statica dove trova alloggio l'o-ring.
La presenza dell'o-ring, che energizza la guarnizione, garantisce la perfetta tenuta sia a basse che ad alte pressioni.
Lo speciale profilo a doppie punte evita pressioni idrodinamiche sulla tenuta e di conseguenza l'effetto blow-by.

Dati tecnici

Pressione:	< 250 bar con materiale standard 93 Sh A a 60° C (C0)
Pressione:	< 400 bar con materiale alternativo 98 Sh A a 60° C (D0)
Pressione:	< 500 bar con materiale alternativo 55 Sh D a 60° C (E0)
Velocità:	< 0.5 m/s
Temperatura:	da - 35° C a + 100° C con punte fino a 110° C
Fluidi:	fluidi a base minerale (vedi tabella 1 a pagina 12)

Materiale

I materiali utilizzati sono dei poliuretani con differenti durezze a seconda delle pressioni di esercizio (C0 o D0 o E0).
L'o-ring in NBR è di durezza 70 Shore A. (N0).
Codice materiale: CN (o in alternativa, DN o EN).

Montaggio

E' necessario eliminare spigoli taglienti e bave nella sede dove alloggia la guarnizione.
Eseguire smusso di invito sulla camicia per facilitare il montaggio del pistone.
Per ulteriori informazioni leggere le istruzioni di montaggio a pag. 26.

PSO TYPE PISTON SEAL

Description

The PSO seal type shows a double profile on the dynamic side and a surface with two small steps on the static side, where the o-ring is housed.
The presence of the o-ring, which energizes the seal, ensures a perfect seal performance at low and high pressure.
The special double profile avoids any Hydro-dynamic pressure on the sealing part and the consequent blow-by effect.

Technical data

Pressure:	*< 250 bar with standard material 93 Sh A at 60° C (C0)*
Pressure:	*< 400 bar with alternative material 98 Sh A at 60° C (D0)*
Pressure:	*< 500 bar with alternative material 55 Sh D at 60° C (E0)*
Speed:	*< 0.5 m/s*
Temperature:	*from - 35° C to + 100° C, with peaks at 110° C*
Fluids:	*mineral-based fluids (see table 1, page 12)*

Material

The chosen material is polyurethane, with hardness according to the working pressure (C0 o D0 o E0).
The o-ring is in NBR hardness is of 70 Shore A (N0).
Compound reference: CN (or, in alternative, DN or EN).

Assembling

Remove any cutting edges and flash in the housing of the seal.
Ensure a lead-in chamfer in the bore to facilitate the piston installation.
For further information please refer to the installation instructions page 26.

PSO



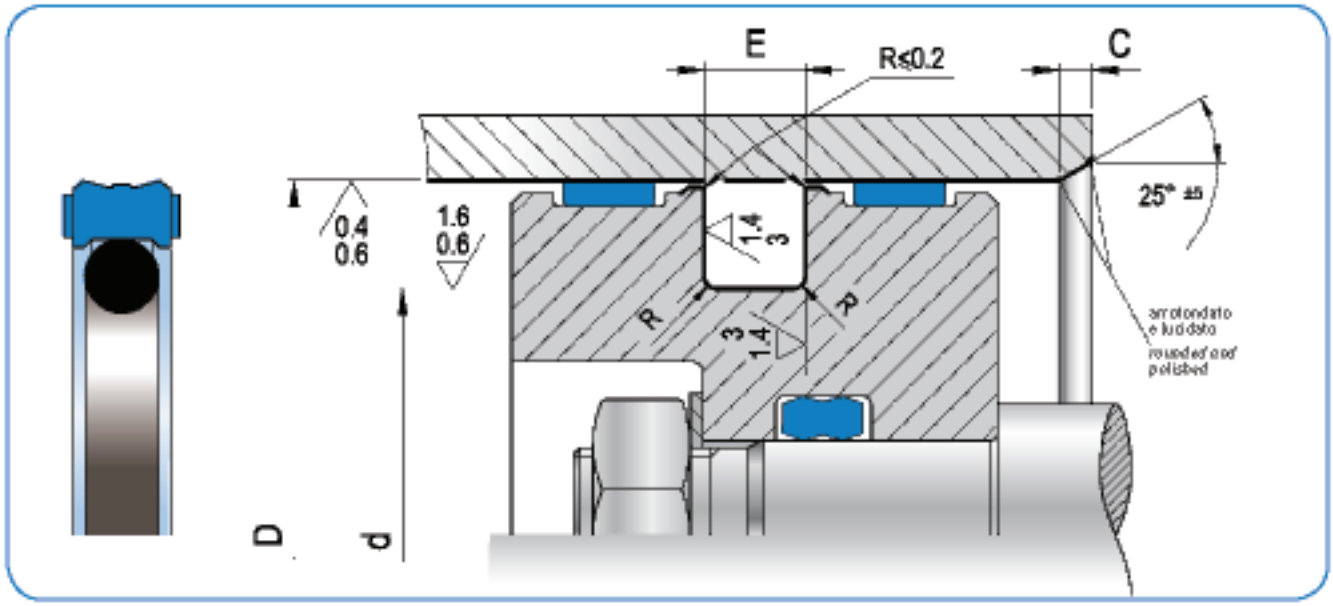

D_{H9}	d_{h9}	$E_{+0,2}$	C	R	o-ring (no)	ART / *ITEM*
12,00	7,1	2,2	2,0	0,2	OR 016	PSO 0120 0710 022 CN
* 20,00	12,50	3,2	3,0	0,2	OR 112	PSO 0200 0125 032 CN
22,00	14,50	3,2	3,0	0,2	OR 113	PSO 0220 0145 032 CN
24,00	16,50	3,2	3,0	0,2	OR 114	PSO 0240 0165 032 CN
* 25,00	14,00	4,2	4,0	0,4	OR 207	PSO 0250 0140 042 CN
* 25,00	17,50	3,2	3,0	0,2	OR 115	PSO 0250 0175 032 CN
28,00	20,50	3,2	3,0	0,4	OR 117	PSO 0280 0205 032 CN
30,00	22,50	3,2	3,0	0,4	OR 118	PSO 0300 0225 032 CN
32,00	21,00	4,2	4,0	0,4	OR 211	PSO 0320 0210 042 CN
* 32,00	24,50	3,2	3,0	0,4	OR 119	PSO 0320 0245 032 CN
35,00	24,00	4,2	4,0	0,4	OR 213	PSO 0350 0240 042 CN
35,00	27,50	3,2	3,0	0,4	OR 121	PSO 0350 0275 032 CN
36,00	25,00	4,2	4,0	0,4	OR 213	PSO 0360 0250 042 CN
36,00	28,50	3,2	3,0	0,4	OR 122	PSO 0360 0285 032 CN
38,00	30,50	3,2	3,0	0,4	OR 123	PSO 0380 0305 032 CN
40,00	24,50	6,3	5,0	0,5	OR 318	PSO 0400 0245 063 CN
* 40,00	29,00	4,2	4,0	0,4	OR 216	PSO 0400 0290 042 CN
42,00	31,00	4,2	4,0	0,5	OR 217	PSO 0420 0310 042 CN
45,00	29,50	6,3	5,0	0,5	OR 320	PSO 0450 0295 063 CN
45,00	34,00	4,2	4,0	0,5	OR 219	PSO 0450 0340 042 CN
48,00	37,00	4,2	4,0	0,5	OR 221	PSO 0480 0370 042 CN
49,00	38,00	4,2	4,0	0,5	OR 222	PSO 0490 0380 042 CN
50,00	34,50	6,3	5,0	0,5	OR 324	PSO 0500 0345 063 CN
* 50,00	39,00	4,2	4,0	0,5	OR 222	PSO 0500 0390 042 CN
50,80	39,80	4,2	4,0	0,5	OR 222	PSO 0508 0398 042 CN
52,00	36,50	6,3	5,0	0,5	OR 324	PSO 0520 0365 063 CN
55,00	39,50	6,3	5,0	0,5	OR 325	PSO 0550 0395 063 CN

D_{H9}	d_{h9}	$E_{+0,2}$	C	R	o-ring (no)	ART / *ITEM*
55,00	44,00	4,2	4,0	0,5	OR 224	PSO 0550 0440 042 CN
57,00	46,00	4,2	4,0	0,5	OR 224	PSO 0570 0460 042 CN
60,00	44,50	6,3	5,0	0,5	OR 327	PSO 0600 0445 063 CN
60,00	49,00	4,2	4,0	0,5	OR 225	PSO 0600 0490 042 CN
* 63,00	47,50	6,3	5,0	0,5	OR 328	PSO 0630 0475 063 CN
* 63,00	52,00	4,2	4,0	0,5	OR 226	PSO 0630 0520 042 CN
63,50	52,50	4,2	4,0	0,5	OR 226	PSO 0635 0525 042 CN
65,00	49,50	6,3	5,0	0,5	OR 328	PSO 0650 0495 063 CN
65,00	54,00	4,2	4,0	0,5	OR 227	PSO 0650 0540 042 CN
70,00	54,50	6,3	5,0	0,5	OR 330	PSO 0700 0545 063 CN
70,00	59,00	4,2	4,0	0,5	OR 228	PSO 0700 0590 042 CN
72,00	61,00	4,2	4,0	0,5	OR 229	PSO 0720 0610 042 CN
75,00	59,50	6,3	5,0	0,5	OR 331	PSO 0750 0595 063 CN
75,00	64,00	4,2	4,0	0,5	OR 230	PSO 0750 0640 042 CN
* 80,00	64,50	6,3	5,0	0,5	OR 333	PSO 0800 0645 063 CN
* 80,00	69,00	4,2	4,0	0,5	OR 842	PSO 0800 0690 042 CN
85,00	69,50	6,3	5,0	0,5	OR 335	PSO 0850 0695 063 CN
88,90	73,40	6,3	5,0	0,5	OR 336	PSO 0889 0734 063 CN
90,00	74,50	6,3	5,0	0,5	OR 336	PSO 0900 0745 063 CN
95,00	79,50	6,3	5,0	0,5	OR 338	PSO 0950 0795 063 CN
* 100,00	84,50	6,3	5,0	0,5	OR 339	PSO 1000 0845 063 CN
105,00	89,50	6,3	5,0	0,5	OR 341	PSO 1050 0895 063 CN
110,00	94,50	6,3	5,0	0,5	OR 343	PSO 1100 0945 063 CN
115,00	94,00	8,1	6,0	0,5	OR 9437	PSO 1150 0940 081 CN
115,00	99,50	6,3	5,0	0,5	OR 344	PSO 1150 0995 063 CN
118,00	102,50	6,3	5,0	0,5	OR 345	PSO 1180 1025 063 CN
120,00	104,50	6,3	5,0	0,5	OR 346	PSO 1200 1045 063 CN

* In conformità alle norme ISO/DIN 5597 e ISO 5597/1 – *In accordance with ISO/DIN 5597 and ISO 5597/1 norms*



PSO

	D_{Hp}	d_{Hp}	$E_{+0,2}$	C	R	o-ring (no)	ART / *ITEM*			
*	125,00	104,00	8,1	6,0	0,5	OR 100X7	PSO	1250	1040	081 CN
*	125,00	109,50	6,3	5,0	0,5	OR 347	PSO	1250	1095	063 CN
	130,00	109,00	8,1	6,0	0,6	OR 106X7	PSO	1300	1090	081 CN
	130,00	114,50	6,3	5,0	0,6	OR 349	PSO	1300	1145	063 CN
	135,00	114,00	8,1	6,0	0,6	OR 425	PSO	1350	1140	081 CN
	135,00	119,50	6,3	5,0	0,6	OR 350	PSO	1350	1195	063 CN
	140,00	119,00	8,1	6,0	0,6	OR 426	PSO	1400	1190	081 CN
	145,00	124,00	8,1	6,0	0,6	OR 428	PSO	1450	1240	081 CN
	150,00	129,00	8,1	6,0	0,6	OR 430	PSO	1500	1290	081 CN
*	160,00	139,00	8,1	6,0	0,6	OR 433	PSO	1600	1390	081 CN
	170,00	149,00	8,1	6,0	0,6	OR 436	PSO	1700	1490	081 CN
	177,80	156,80	8,1	6,0	0,6	OR 437	PSO	1778	1568	081 CN
	180,00	159,00	8,1	6,0	0,6	OR 438	PSO	1800	1590	081 CN
	185,00	164,00	8,1	6,0	0,6	OR 874	PSO	1850	1640	081 CN
	190,00	169,00	8,1	6,0	0,6	OR 439	PSO	1900	1690	081 CN
*	200,00	179,00	8,1	6,0	0,6	OR 441	PSO	2000	1790	081 CN
	210,00	189,00	8,1	6,0	0,6	OR 443	PSO	2100	1890	081 CN
	220,00	199,00	8,1	6,0	0,6	OR 444	PSO	2200	1990	081 CN
	230,00	209,00	8,1	6,0	0,6	OR 445	PSO	2300	2090	081 CN
	240,00	219,00	8,1	6,0	0,6	OR 446	PSO	2400	2190	081 CN
*	250,00	229,00	8,1	6,0	0,6	OR 447	PSO	2500	2290	081 CN

* in conformità alle norme ISO/DIN 5597 e ISO 5597/1 – *in accordance with ISO/DIN 5597 and ISO 5597/1 norms*
Materiali alternativi: DN (98 Sh A); EN (55 Sh D) – *Alternative compounds: DN (98 Sh A); EN (55 Sh D)*

Nota: altre dimensioni non a catalogo a richiestaConsultare il nostro ufficio tecnico.
Remark: please contact our technical dept. for futher dimensions not included in the catalogue.

PSO



PSA
PAE
PSH
RR
PSO
PSQ
TPD
KDSA
KDSB
KDSP
KDAE



PSQ

TENUTA PISTONE TIPO PSQ

Descrizione

La guarnizione PSQ ha un profilo con doppie punte al centro nella parte dinamica ed un piano con due piccoli gradini nella parte statica dove alloggiali Q-ring.
La presenza del Q-ring energizza la guarnizione e garantisce la perfetta tenuta sia a bassa che ad alta pressione.
La geometria del profilo a doppie punte centrali evita pressioni idrodinamiche sulla tenuta e di conseguenza l'effetto blow-by.

Dati tecnici

Pressione: < 250 Bar con materiale tipo C0 a 93 Shore A a temperatura di 60° C.
< 400 Bar con materiale tipo D0 a 98 Shore A a temperatura di 60° C.
Velocità: < 0,8 m/s
Temperatura: da – 35° C a + 100 ° C con punte fino a 110° C.
Fluidi: oli a base minerale (vedi tabella 1 a pagina 12)

Materiale

I materiali della tenuta sono poliuretani di diverse durezze a seconda delle pressioni di esercizio.
Codice materiale: CQ (93 Shore A con Q-ring) o, in alternativa, DQ (98 Shore A con Q-ring)

Montaggio

E' necessario eliminare gli spigoli taglienti e lebave nella sede dove alloggia la guarnizione.
Eseguire smusso d'invito sulla camicia per facilitare il montaggio del pistone.
Per ulteriori informazioni leggere le istruzioni di montaggio a pag 26.

PSQ TYPE PISTON SEAL

Description

The PSQ seal has a double profile in the in the dynamic part, and two small steps in the static part where the Q-ring is housed.
The Q-ring energizes the seal and provides a perfect sealing performance at low and high pressure.
The shape of the central double profile prevents hydrodynamic pressures on the seal and the resulting blow-out effect.

Technical data

Pressure: < 250 Bar with a C0-type material at 93 Shore A, at a temperature of 60° C.
< 400 Bar a D0-type material, at 98 Shore A, at a temperature of 60° C.
Speed: < 0.8 m/s
Temperature: from – 35° C to + 100 ° C with peaks up to 110° C.
Fluids: mineral oils (see table 1, page 12)

Material

The sealing parts are in polyurethanes with different hardness, according to the specific operating pressures.
Compound reference: CQ (93 Shore A with Q-ring) or, alternatively, DQ (98 Shore A with Q-ring)

Assembling

Cutting edges or flash must be removed in the housing of the seal.
Ensure a lead-in chamfer in the bore to facilitate the piston installation.
For further information please refer to the assembly instructions on page 26.

PSQ



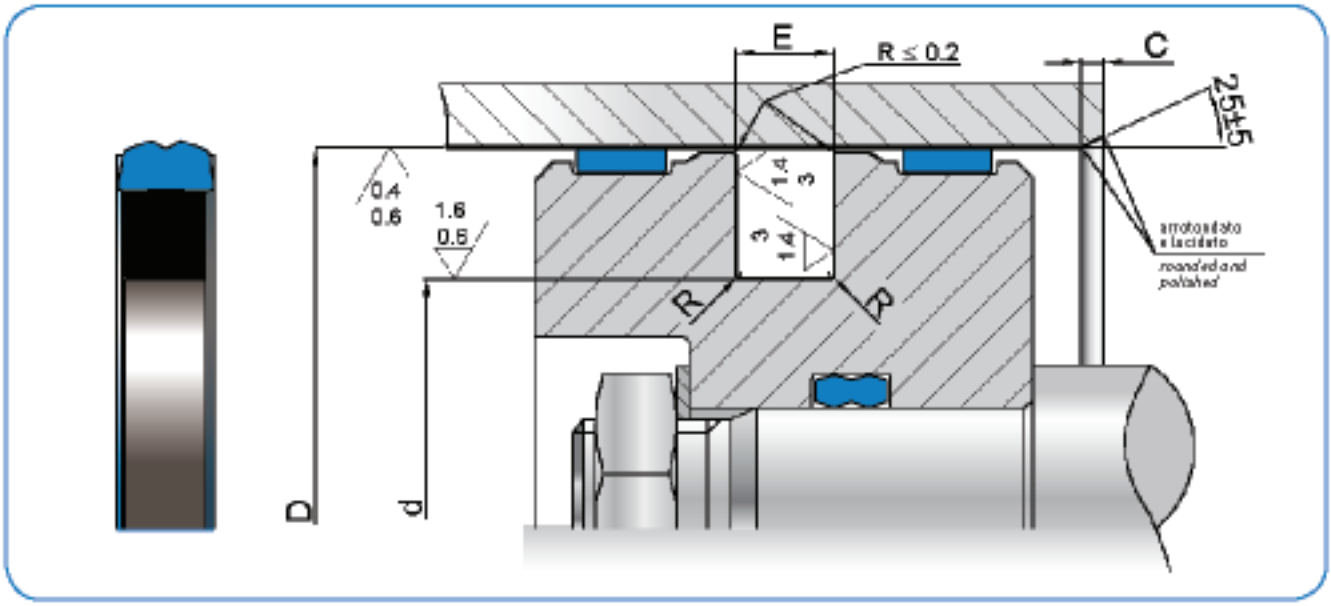

	D_{H9}	d_{h9}	$E_{+0,2}$	C	R	ART / *ITEM*
	40,0	24,5	6,3	5,0	0,4	PSQ 0400 0245 063 CN
*	40,0	29,0	4,2	4,0	0,3	PSQ 0400 0290 042 CN
	45,0	34,0	4,2	4,0	0,3	PSQ 0450 0340 042 CN
*	50,0	34,5	6,3	5,0	0,4	PSQ 0500 0345 063 CN
*	50,0	39,0	4,2	4,0	0,3	PSQ 0500 0390 042 CN
	55,0	39,5	6,3	5,0	0,4	PSQ 0550 0395 063 CN
	60,0	44,5	6,3	5,0	0,4	PSQ 0600 0445 063 CN
	60,0	49,0	4,2	4,0	0,3	PSQ 0600 0490 042 CN
*	63,0	47,5	6,3	5,0	0,4	PSQ 0630 0475 063 CN
*	63,0	52,0	4,2	5,0	0,3	PSQ 0630 0520 042 CN
	65,0	49,5	6,3	4,0	0,4	PSQ 0650 0495 063 CN
	70,0	54,5	6,3	5,0	0,4	PSQ 0700 0545 063 CN
	70,0	59,0	4,2	4,0	0,3	PSQ 0700 0590 042 CN
	75,0	59,5	6,3	5,0	0,4	PSQ 0750 0595 063 CN
	80,0	59,0	8,1	6,0	0,4	PSQ 0800 0590 081 CN

	D_{H9}	d_{h9}	$E_{+0,2}$	C	R	ART / *ITEM*
*	80,0	64,5	6,3	5,0	0,4	PSQ 0800 0645 063 CN
	85,0	69,5	6,3	5,0	0,4	PSQ 0850 0695 063 CN
	90,0	69,0	8,1	6,0	0,4	PSQ 0900 0690 081 CN
	90,0	74,5	6,3	5,0	0,4	PSQ 0900 0745 063 CN
	95,0	79,5	6,3	5,0	0,4	PSQ 0950 0795 063 CN
	100,0	79,0	8,1	6,0	0,4	PSQ 1000 0790 081 CN
*	100,0	84,5	6,3	5,0	0,4	PSQ 1000 0845 063 CN
	105,0	89,5	6,3	5,0	0,4	PSQ 1050 0895 063 CN
	110,0	89,0	8,1	6,0	0,4	PSQ 1100 0890 081 CN
	110,0	94,5	6,3	5,0	0,4	PSQ 1100 0945 063 CN
	115,0	94,0	8,1	6,0	0,4	PSQ 1150 0940 081 CN
	120,0	99,0	8,1	6,0	0,4	PSQ 1200 0990 081 CN
*	125,0	104,0	8,1	6,0	0,4	PSQ 1250 1040 081 CN
*	125,0	109,5	6,3	5,0	0,4	PSQ 1250 1095 063 CN
	130,0	109,0	8,1	6,0	0,4	PSQ 1300 1090 081 CN

* ISO 7425

Nota: altre dimensioni non a catalogo a richiesta. Consultare il nostro ufficio tecnico.

Remark: please contact our technical dept. for further dimensions not included in the catalogue.



TPD

TENUTA PISTONE TIPO TPD

Descrizione

La tenuta pistone tipo TPD consta di un anello opportunamente sagomato in PTFE caricato avente funzione di tenuta dinamica e di un anello O-Ring che effettua la tenuta statica e contemporaneamente svolge un effetto energizzante.

Dati Tecnici

Pressione: < 600 bar
Velocità: < 15 m/s
Temperatura: per il tipo standard con OR in nitrile da - 30° C a + 100° C, con punte per periodi brevi fino a 120° C.
Per range di temperature differente occorre sostituire l'O-Ring con un altro tipo più idoneo

Materiale

Per il tipo standard PTFE caricato a bronzo ed O-Rig in nitrile.
Codice materiale: TN

TPD TYPE PISTON SEAL

Description

The TPD piston seal is composed of two rings. The dynamic seal is a filled PTFE ring with the required shape, the static seal is an O-Ring also working as energizer.

Technical data

Pressure: < 600 bar
Speed: < 15 m/s
Temperature: from - 30° C up to + 100° C for the standard type with nitrile OR. Short peaks till 120° C. For a different temperature range, the O-Ring should be replaced by a more suitable model

Material

Bronze-filled PTFE for the standard type, and NBR for the O-Ring.
Compound reference: TN

TPD



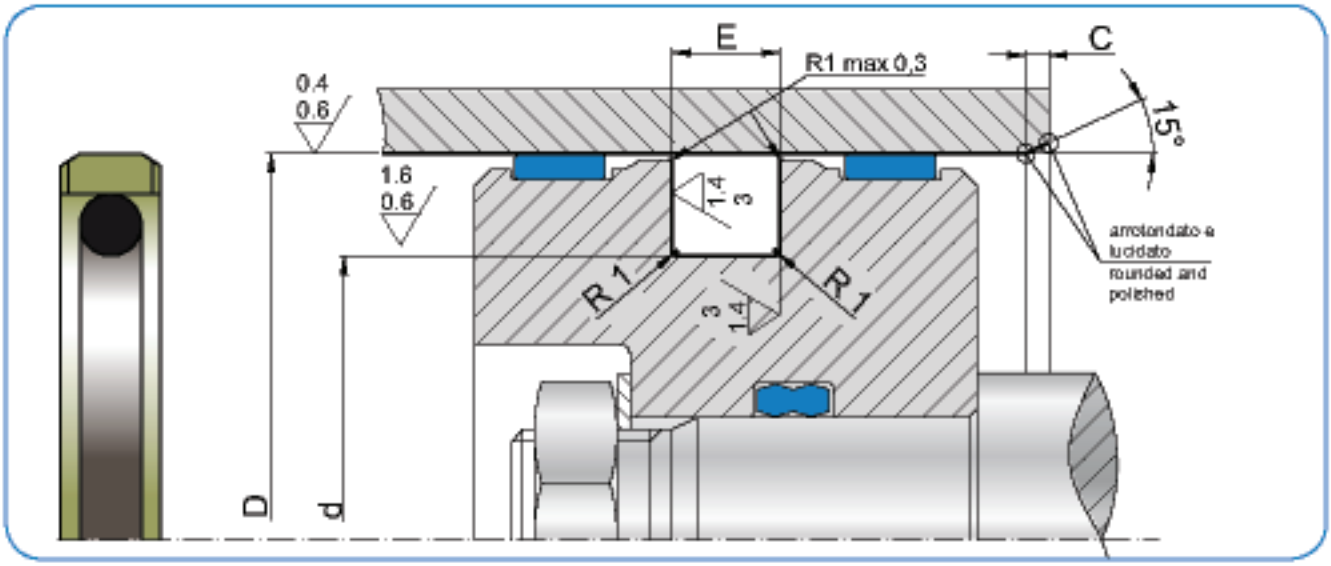

D	d	E	O-Ring	C	ART / ITEM
8,0	3,1	2,2	006	5,0	TPD 0080 0031 022 TN
10,0	5,1	2,2	008	5,0	TPD 0100 0051 022 TN
12,0	7,1	2,2	010	5,0	TPD 0120 0071 022 TN
15,0	7,5	3,2	108	5,0	TPD 0150 0075 032 TN
16,0	8,5	3,2	109	5,0	TPD 0160 0085 032 TN
18,0	10,5	3,2	110	5,0	TPD 0180 0105 032 TN
20,0	12,5	3,2	111	5,0	TPD 0200 0125 032 TN
22,0	14,5	3,2	113	5,0	TPD 0220 0145 032 TN
24,0	16,5	3,2	114	5,0	TPD 0240 0165 032 TN
25,0	17,5	3,2	115	5,0	TPD 0250 0175 032 TN
28,0	20,5	3,2	116	5,0	TPD 0280 0205 032 TN
30,0	22,5	3,2	118	5,0	TPD 0300 0225 032 TN
32,0	24,5	3,2	119	5,0	TPD 0320 0245 032 TN
35,0	27,5	3,2	121	5,0	TPD 0350 0275 032 TN
39,0	31,5	3,2	124	5,0	TPD 0390 0315 032 TN
40,0	29,0	4,2	216	5,0	TPD 0400 0290 042 TN
42,0	31,0	4,2	217	5,0	TPD 0420 0310 042 TN
45,0	34,0	4,2	219	5,0	TPD 0450 0340 042 TN
48,0	37,0	4,2	221	5,0	TPD 0480 0370 042 TN
50,0	39,0	4,2	222	5,0	TPD 0500 0390 042 TN
52,0	41,0	4,2	223	5,0	TPD 0520 0410 042 TN
55,0	44,0	4,2	224	5,0	TPD 0550 0440 042 TN
60,0	49,0	4,2	225	5,0	TPD 0600 0490 042 TN
63,0	52,0	4,2	226	5,0	TPD 0630 0520 042 TN
65,0	54,0	4,2	227	5,0	TPD 0650 0540 042 TN
70,0	59,0	4,2	228	5,0	TPD 0700 0590 042 TN
75,0	64,0	4,2	230	5,0	TPD 0750 0640 042 TN
80,0	64,5	6,3	333	5,0	TPD 0800 0645 063 TN
85,0	69,5	6,3	335	5,0	TPD 0850 0695 063 TN
90,0	74,5	6,3	336	5,0	TPD 0900 0745 063 TN

D	d	E	O-Ring	C	ART / ITEM
100,0	84,5	6,3	339	5,0	TPD 1000 0845 063 TN
105,0	89,5	6,3	341	7,0	TPD 1050 0895 063 TN
110,0	94,5	6,3	343	7,0	TPD 1100 0945 063 TN
115,0	99,5	6,3	344	7,0	TPD 1150 0995 063 TN
120,0	104,5	6,3	346	7,0	TPD 1200 1045 063 TN
125,0	109,5	6,3	347	7,0	TPD 1250 1095 063 TN
130,0	114,5	6,3	349	7,0	TPD 1300 1145 063 TN
135,0	114,0	8,1	425	7,0	TPD 1350 1140 081 TN
140,0	119,0	8,1	426	7,0	TPD 1400 1190 081 TN
145,0	124,0	8,1	428	7,0	TPD 1450 1240 081 TN
150,0	129,0	8,1	429	7,0	TPD 1500 1290 081 TN
160,0	139,0	8,1	433	7,0	TPD 1600 1390 081 TN
170,0	149,0	8,1	436	7,0	TPD 1700 1490 081 TN
180,0	159,0	8,1	438	7,0	TPD 1800 1590 081 TN
190,0	169,0	8,1	439	7,0	TPD 1900 1690 081 TN
200,0	179,0	8,1	441	7,0	TPD 2000 1790 081 TN
210,0	189,0	8,1	442	10,0	TPD 2100 1890 081 TN
220,0	199,0	8,1	444	10,0	TPD 2200 1990 081 TN
230,0	209,0	8,1	445	10,0	TPD 2300 2090 081 TN
240,0	219,0	8,1	446	10,0	TPD 2400 2190 081 TN
250,0	229,0	8,1	447	10,0	TPD 2500 2290 081 TN
260,0	239,0	8,1	447	10,0	TPD 2600 2390 081 TN
270,0	249,0	8,1	448	10,0	TPD 2700 2490 081 TN
280,0	259,0	8,1	449	10,0	TPD 2800 2590 081 TN
290,0	269,0	8,1	450	10,0	TPD 2900 2690 081 TN
300,0	279,0	8,1	451	10,0	TPD 3000 2790 081 TN



KDSA

TENUTA PISTONE COMPATTA TIPO KDSA

Descrizione

La tenuta pistone compatta tipo KDSA è costituita da un elemento centrale in gomma nitrilica che esercita la funzione di tenuta, da due supporti laterali all'elemento in gomma che agiscono da anelli antiestrusione e da due guide esterne che mantengono in guida il pistone nel cilindro.

Dati tecnici

Pressione: da 0 a 300 bar con punte fino a 400 bar a 60 °C
Velocità: < 0.5 m/s
Temperatura: da - 30 °C a +100 °C
Fluidi: oli a base minerale (vedi tabella 1 a pagina 12)

Materiale

I materiali utilizzati per la costruzione di questotipo di tenuta sono i seguenti:

- L'elemento centrale è in NBR con durezza 70 Shore A ± 3
- I supporti laterali sono in elastomero termoplastico (TPE)
- Le guide esterne sono in resina poliacetalica (POM)

Codice materiale standard: CX

Montaggio

Il montaggio di questa tenuta può essere eseguito sia in cava chiusa su pistone monoblocco, sia in cava aperta su pistone in due pezzi.
L'ordine del montaggio deve essere il seguente:

- Elemento in gomma;
- Supporti;
- Guide.

E' necessario che il pistone non presenti bave di lavorazione meccanica che danneggerebbero l'elemento in gomma durante il montaggio.

KDSA TYPE COMPACT PISTON SEAL

Description

The KDSA compact seal is made of a central unit made of NBR working as a seal, two side supports, working as anti-extrusion ring, and two external guide rings, keeping aligned the piston in the cylinder.

Technical data

Pressure: from 0 to 300 bar with peaks till 400 bar at 60°C
Speed: < 0.5 m/s
Temperature: from - 30 °C at +100 °C
Fluids: Mineral oils (see table 1, page 12)

Material

The compounds used to manufacture this seal type are:

- ***The central units is made of NBR, the hardness is** 70 Shore A ± 3*
- ***The sides support are made of thermoplastic** elastomer (TPE)*
- ***The external wear rings are made of polyacetalic** resin (POM)*

Compound reference: CX

Assembling

The assembling of this seal can be carried out in either closed groove in a mono-block piston, or in open groove in a two-parts piston.
The assembling has to be done as follows:

- *Rubber element;*
- *Supports;*
- *Wear rings.*

The piston must not have machining scores which may damage the rubber unit during the installation.

KDSA



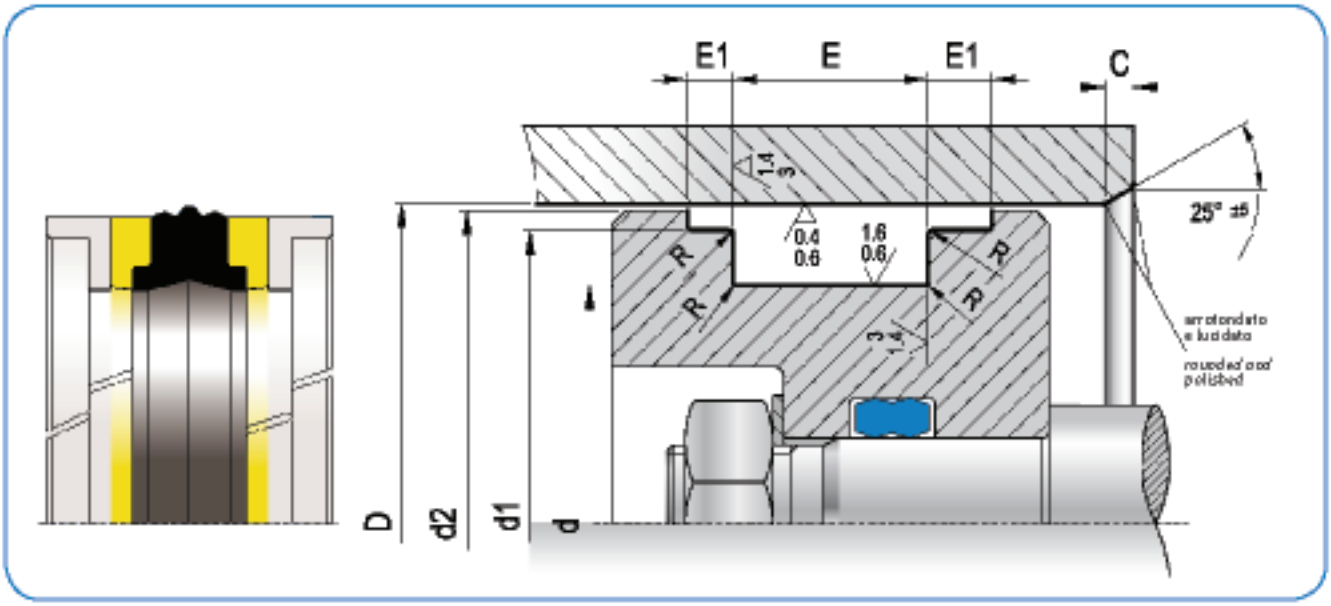

D_{H9}	d_{h9}	$E_{+0,2}$	d_{3h9}	$d_{2\pm0,2}$	$E_{3\ 0/+0,1}$	R	C	ART / *ITEM*
32,0	24,0	15,5	28,0	31,4	3,2	0,4	3,5	KDSA 0320 0240 155 CX
40,0	32,0	15,5	36,0	39,4	3,2	0,4	4,0	KDSA 0400 0320 155 CX
50,0	38,0	20,5	46,0	49,4	4,2	0,4	4,0	KDSA 0500 0380 205 CX
60,0	48,0	20,5	56,0	59,4	4,2	0,4	4,5	KDSA 0600 0480 205 CX
63,0	51,0	20,5	59,0	62,4	4,2	0,4	4,5	KDSA 0630 0510 205 CX
70,0	58,0	20,5	66,0	69,4	4,2	0,4	4,5	KDSA 0700 0580 205 CX
80,0	66,0	22,5	76,0	79,4	5,2	0,4	4,5	KDSA 0800 0660 225 CX
90,0	76,0	22,5	86,0	89,4	5,2	0,4	4,5	KDSA 0900 0760 225 CX
100,0	86,0	22,5	96,0	99,4	5,2	0,4	5,0	KDSA 1000 0860 225 CX
110,0	96,0	22,5	106,0	109,4	5,2	0,4	5,0	KDSA 1100 0960 225 CX
120,0	106,0	22,5	116,0	119,4	5,2	0,8	5,0	KDSA 1200 1060 225 CX
125,0	108,0	26,5	121,0	124,4	7,2	0,8	5,0	KDSA 1250 1080 265 CX
130,0	113,0	26,5	126,0	129,4	7,2	0,8	5,0	KDSA 1300 1130 265 CX
140,0	123,0	26,5	136,0	139,4	7,2	0,8	5,0	KDSA 1400 1230 265 CX
150,0	133,0	26,5	146,0	149,4	7,2	0,8	5,0	KDSA 1500 1330 265 CX
160,0	143,0	26,5	156,0	159,4	7,2	0,8	5,0	KDSA 1600 1430 265 CX

Nota: altre dimensioni non a catalogo a richiesta. Consultare il nostro ufficio tecnico.

Remark: please contact our technical dept. for further dimensions not included in the catalogue.



KDSB

TENUTA PISTONE COMPATTA TIPO KDSB

Descrizione

La tenuta pistone compatta tipo KDSB è costituita da un elemento centrale in gomma nitrilica che esercita la funzione di tenuta, da due supporti laterali all'elemento in gomma che agiscono da anelli antiestrusione e da due guide esterne che mantengono in guida il pistone nel cilindro.

Dati tecnici

Pressione: da 0 a 300 bar con punte fino a 400 bar a 60 °C
Velocità: < 0.5 m/s
Temperatura: da - 30 °C a +100 °C
Fluidi: oli a base minerale (vedi tabella 1 a pagina 12)

Materiale

I materiali utilizzati per la costruzione di questotipo di tenuta sono i seguenti:

- L'elemento centrale è in NBR con durezza 70 Shore A ± 3
- I supporti laterali sono in elastomero termoplastico (TPE)
- Le guide esterne sono in resina poliacetalica (POM)

Codice materiale standard: CX

Montaggio

Il montaggio di questa tenuta può essere eseguito sia in cava chiusa su pistone monoblocco, sia in cava aperta su pistone in due pezzi.
L'ordine del montaggio deve essere il seguente:

- Elemento in gomma;
- Supporti;
- Guide.

E' necessario che il pistone non presenti bave di lavorazione meccanica che danneggerebbero l'elemento in gomma durante il montaggio.

KDSB TYPE COMPACT PISTON SEAL

Description

The KDSB compact seal is made of a central unit in NBR working as a seal, two side supports, working as anti-extrusion ring, and two external guide ring keeping aligned the piston in the cylinder.

Technical data

Pressure: from 0 to 300 bar with peaks till 400 bar at 60°C
Speed: < 0.5 m/s
Temperature: from - 30 °C at +100 °C
Fluids: Mineral oils (see table 1, page 12)

Material

The compounds used to manufacture this seal type are the following:

- *The central units is made of NBR, the hardness is 70 Shore A ± 3*
- *The sides support are made of a thermoplastic elastomer (TPE)*
- *The external wear rings are made of polyacetalic resin (POM)*

Compound reference: CX

Assembling

The assembling of this seal can be carried out in either closed groove in a mono-block piston, or in open groove in a two-parts piston.
The assembling has to be done as follows:

- *Rubber element;*
- *Supports;*
- *Wear rings.*

Avoid machining scores on the piston which may damage the rubber unit during the installation.

KDSB



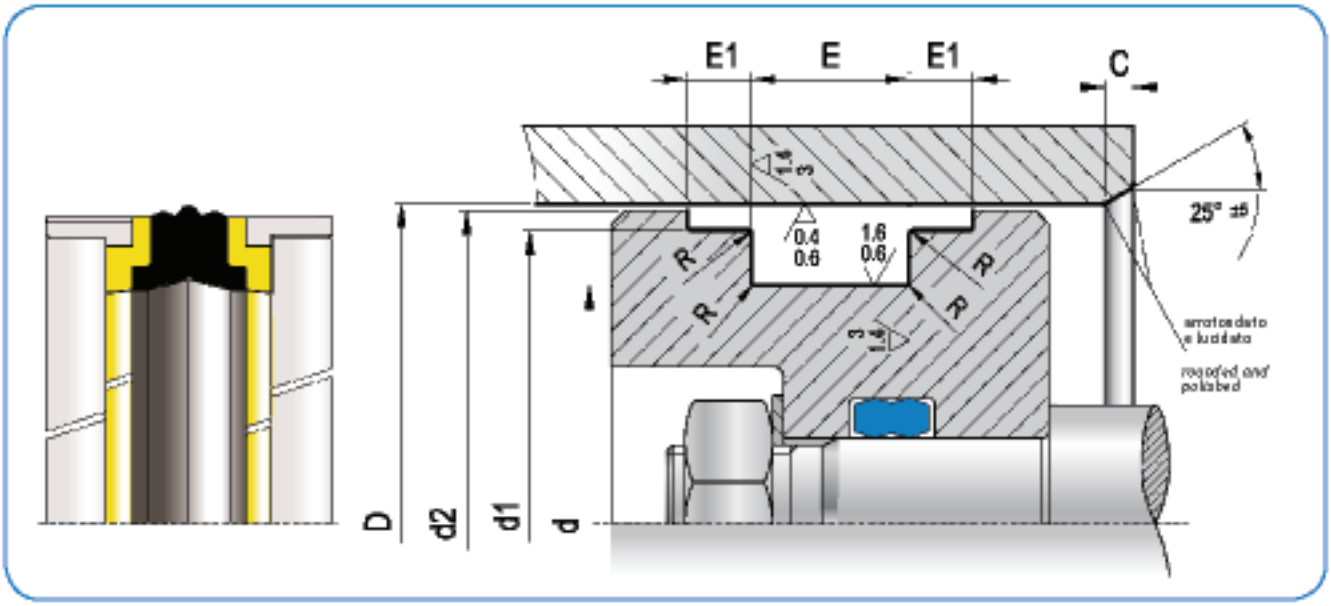

D_{Hg}	d_{hg}	$E_{+0,2}$	d_{1hg}	$d_{\pm 0,2}$	$E_{1\ 0/+0,4}$	R	C	ART / *ITEM*
20,0	11,0	13,5	17,00	19,0	2,10	0,4	3,5	KDSB 0200 0110 135 CX
22,0	13,0	13,5	19,00	21,0	2,10	0,4	3,5	KDSB 0220 0130 135 CX
25,0	15,0	12,0	21,00	23,0	4,00	0,4	3,5	KDSB 0250 0150 120 CX
25,0	15,0	12,5	22,00	24,0	4,00	0,4	3,5	KDSB 0250 0150 125 CX
25,0	15,0	16,4	21,45	23,5	6,35	0,4	3,5	KDSB 0250 0150 164 CX
25,0	16,0	13,5	22,00	24,0	2,10	0,4	3,5	KDSB 0250 0160 135 CX
28,0	19,0	13,5	25,00	27,0	2,10	0,4	3,5	KDSB 0280 0190 135 CX
30,0	21,0	13,5	27,00	29,0	2,10	0,4	3,5	KDSB 0300 0210 135 CX
32,0	22,0	15,5	28,00	31,0	2,60	0,4	3,5	KDSB 0320 0220 155 CX
32,0	22,0	16,4	28,50	30,5	6,35	0,4	3,5	KDSB 0320 0220 164 CX
35,0	25,0	15,5	31,00	34,0	2,60	0,4	3,5	KDSB 0350 0250 155 CX
35,0	25,0	16,4	31,40	33,5	6,35	0,4	3,5	KDSB 0350 0250 164 CX
40,0	24,0	18,4	35,40	38,5	6,35	0,4	4,0	KDSB 0400 0240 184 CX
40,0	26,0	15,5	36,00	39,0	2,60	0,4	4,0	KDSB 0400 0260 155 CX
40,0	30,0	12,5	36,00	38,0	4,00	0,4	4,0	KDSB 0400 0300 125 CX
40,0	30,0	16,4	35,40	38,5	6,35	0,4	4,0	KDSB 0400 0300 164 CX
42,0	28,0	15,5	38,00	41,0	2,60	0,4	4,0	KDSB 0420 0280 155 CX
45,0	29,0	18,4	40,40	43,5	6,35	0,4	4,0	KDSB 0450 0290 184 CX
45,0	31,0	15,5	41,00	44,0	2,60	0,4	4,0	KDSB 0450 0310 155 CX
45,0	35,0	16,4	40,40	43,5	6,35	0,4	4,0	KDSB 0450 0350 164 CX
50,0	34,0	18,4	45,40	48,5	6,35	0,4	4,0	KDSB 0500 0340 184 CX
50,0	34,0	20,5	46,00	49,0	3,10	0,4	4,0	KDSB 0500 0340 205 CX
55,0	39,0	18,4	50,36	53,5	6,35	0,4	4,0	KDSB 0550 0390 184 CX
55,0	39,0	20,5	51,00	54,0	3,10	0,4	4,0	KDSB 0550 0390 205 CX
56,0	40,0	20,5	52,00	55,0	3,10	0,4	4,0	KDSB 0560 0400 205 CX
60,0	44,0	18,4	55,40	58,5	6,35	0,4	4,5	KDSB 0600 0440 184 CX
60,0	44,0	20,5	56,00	59,0	3,10	0,4	4,5	KDSB 0600 0440 205 CX



KDSB

D_{H9}	d_{h9}	$E_{+0,2}$	d_{sh9}	$d_{zero,2}$	$E_{\pm 0/+0,1}$	R	C	ART / *ITEM*
63,0	47,0	18,4	58,40	61,5	6,35	0,4	4,5	KDSB 0630 0470 184 CX
63,0	47,0	19,4	58,40	61,5	6,35	0,4	4,5	KDSB 0630 0470 194 CX
63,0	47,0	20,5	59,00	62,0	3,10	0,4	4,5	KDSB 0630 0470 205 CX
65,0	49,0	20,5	61,00	64,0	3,10	0,4	4,5	KDSB 0650 0490 205 CX
65,0	50,0	18,4	60,40	63,5	6,35	0,4	4,5	KDSB 0650 0500 184 CX
70,0	50,0	22,4	64,20	68,3	6,35	0,4	4,5	KDSB 0700 0500 224 CX
70,0	54,0	20,5	66,00	69,0	3,10	0,4	4,5	KDSB 0700 0540 205 CX
75,0	55,0	22,4	69,20	73,3	6,35	0,4	4,5	KDSB 0750 0550 224 CX
75,0	59,0	20,5	71,00	74,0	3,10	0,4	4,5	KDSB 0750 0590 205 CX
80,0	60,0	22,4	74,15	78,3	6,35	0,4	4,5	KDSB 0800 0600 224 CX
80,0	62,0	22,5	76,00	79,0	3,60	0,4	4,5	KDSB 0800 0620 225 CX
85,0	65,0	22,4	79,15	83,3	6,35	0,4	4,5	KDSB 0850 0650 224 CX
90,0	70,0	22,4	84,15	88,3	6,35	0,4	4,5	KDSB 0900 0700 224 CX
90,0	72,0	22,5	86,00	89,0	3,60	0,4	4,5	KDSB 0900 0720 225 CX
95,0	75,0	22,4	89,15	93,3	6,35	0,4	4,5	KDSB 0950 0750 224 CX
100,0	75,0	22,4	93,15	98,0	6,35	0,4	5,0	KDSB 1000 0750 224 CX
100,0	82,0	22,5	96,00	99,0	3,60	0,4	5,0	KDSB 1000 0820 225 CX
105,0	80,0	22,4	98,10	103,0	6,35	0,4	5,0	KDSB 1050 0800 224 CX
110,0	85,0	22,4	103,10	108,0	6,35	0,4	5,0	KDSB 1100 0850 224 CX
110,0	92,0	22,5	106,00	109,0	3,60	0,4	5,0	KDSB 1100 0920 225 CX
115,0	90,0	22,4	108,10	113,0	6,35	0,4	5,0	KDSB 1150 0900 224 CX
115,0	97,0	22,5	111,00	114,0	3,60	0,4	5,0	KDSB 1150 0970 225 CX
120,0	95,0	22,4	113,10	118,1	6,35	0,8	5,0	KDSB 1200 0950 224 CX
125,0	100,0	25,4	118,10	123,0	6,35	0,8	5,0	KDSB 1250 1000 254 CX
125,0	103,0	26,5	121,00	124,0	5,10	0,8	5,0	KDSB 1250 1030 265 CX
130,0	105,0	25,4	122,60	127,5	9,50	0,8	5,0	KDSB 1300 1050 254 CX
130,0	105,0	25,4	123,10	128,0	6,35	0,8	5,0	KDSB1 1300 1050 254 CX
135,0	110,0	25,4	127,60	132,5	9,50	0,8	5,0	KDSB 1350 1100 254 CX
135,0	110,0	25,4	128,10	133,0	6,35	0,8	5,0	KDSB1 1350 1100 254 CX
140,0	115,0	25,4	132,60	137,5	9,50	0,8	5,0	KDSB 1400 1150 254 CX
140,0	115,0	25,4	133,00	138,0	6,35	0,8	5,0	KDSB1 1400 1150 254 CX
140,0	118,0	26,5	136,00	139,0	5,10	0,8	5,0	KDSB 1400 1180 265 CX
145,0	120,0	25,4	137,60	142,5	9,50	0,8	5,0	KDSB 1450 1200 254 CX
145,0	120,0	25,4	138,30	143,0	6,35	0,8	5,0	KDSB1 1450 1200 254 CX
150,0	125,0	25,4	142,60	147,5	9,50	0,8	5,0	KDSB 1500 1250 254 CX
150,0	125,0	25,4	143,00	148,0	6,35	0,8	5,0	KDSB1 1500 1250 254 CX
150,0	128,0	26,5	146,00	149,0	5,10	0,8	5,0	KDSB 1500 1280 265 CX
155,0	130,0	25,4	147,60	152,5	9,50	0,8	5,0	KDSB 1550 1300 254 CX
155,0	130,0	25,4	148,00	153,0	6,35	0,8	5,0	KDSB1 1550 1300 254 CX
160,0	130,0	25,4	153,00	157,5	6,35	0,8	5,0	KDSB1 1600 1300 254 CX
160,0	130,0	25,4	152,60	157,5	9,50	0,8	5,0	KDSB 1600 1300 254 CX
160,0	135,0	25,4	152,60	157,5	9,50	0,8	5,0	KDSB 1600 1350 254 CX
160,0	138,0	26,5	156,00	159,0	5,10	0,8	5,0	KDSB 1600 1380 265 CX
165,0	140,0	25,4	157,60	162,5	9,50	0,8	5,0	KDSB 1650 1400 254 CX
170,0	145,0	25,4	161,70	167,1	12,70	0,8	5,0	KDSB 1700 1450 254 CX

KDSB



D_{H9}	d_{h9}	$E_{+0,2}$	d_{1h9}	$d_{2\pm0,2}$	$E_{1\ 0/+0,1}$	R	C	ART / *ITEM*
170,0	148,0	26,5	166,00	169,0	5,10	0,8	5,0	KDSB 1700 1480 265 CX
175,0	150,0	25,4	166,70	172,1	12,70	0,8	5,0	KDSB 1750 1500 254 CX
180,0	150,0	35,4	172,95	177,9	6,35	0,8	5,0	KDSB 1800 1500 354 CX
180,0	155,0	25,4	171,70	177,1	12,70	0,8	5,0	KDSB 1800 1550 254 CX
185,0	160,0	25,4	176,70	182,1	12,70	0,8	5,0	KDSB 1850 1600 254 CX
190,0	165,0	25,4	181,70	187,0	12,70	0,8	5,0	KDSB 1900 1650 254 CX
195,0	170,0	25,4	186,70	192,0	12,70	0,8	5,0	KDSB 1950 1700 254 CX
200,0	175,0	25,4	191,60	197,0	12,70	0,8	6,0	KDSB 2000 1750 254 CX
210,0	185,0	25,4	201,60	207,0	12,70	0,8	6,0	KDSB 2100 1850 254 CX
220,0	190,0	35,4	212,70	217,9	6,35	0,8	6,0	KDSB 2200 1900 354 CX
220,0	195,0	25,4	211,60	217,0	12,70	0,8	6,0	KDSB 2200 1950 254 CX
230,0	205,0	25,4	221,60	227,0	12,70	0,8	6,0	KDSB 2300 2050 254 CX
240,0	215,0	25,4	231,60	237,0	12,70	0,8	6,0	KDSB 2400 2150 254 CX
250,0	220,0	35,4	242,90	247,9	6,35	0,8	6,0	KDSB 2500 2200 354 CX
250,0	225,0	25,4	241,60	247,0	12,70	0,8	6,0	KDSB 2500 2250 254 CX

Nota: altre dimensioni non a catalogo a richiesta. Consultare il nostro ufficio tecnico.

Remark: please contact our technical dept. for further dimensions not included in the catalogue.



KDSP

TENUTA PISTONE COMPATTA TIPO KDSP

Descrizione

La guarnizione KDSP nasce per tenuta pistone con sedi intercambiabili ISO 6547.
E' composta da soli tre elementi: quello centrale in poliuretano (che ha la funzione di tenuta) e due guide laterali in poliacetalica rinforzata vetro.
Questo sistema permette di eliminare i supporti antiestrusione, in quanto l'elemento centrale col suo alto modulo elastico ha una durezza superiore alla gomma nitrilica NBR.
L'attrito di primo distacco ed in esercizio si mantiene basso per la particolare geometria della guarnizione.

Dati tecnici

Pressione: da 0 a 300 Bar con punte fino a 400 Bar a 60° C.
Velocità: 0,8 m/s
Temperatura: da – 30° C a + 100 ° C
Fluidi: oli a base minerale
(vedi tabella 1 a pagina 12)

Materiale

I materiali utilizzati per la costruzione di questo tipo di guarnizione sono i seguenti:
- l'elemento centrale in poliuretano di durezza 93 Shore A Codice materiale tipo C0
- gli elementi laterali in poliacetalica caricata vetro (POM)

Codice materiale: CX

Montaggio

Il montaggio di questa tenuta può essere eseguito sia in cava chiusa su pistone monoblocco, sia in cava aperta su pistone in due pezzi.
E' necessario che il pistone non presenti bave di lavorazione meccanica che danneggerebbero l'elemento di tenuta durante il montaggio.

KDSP TYPE COMPACT PISTON SEAL

Description

The KDSP seal is designed to be a piston seal with interchangeable seats ISO 6547.
It consists of only three elements: a polyurethane seal at the middle and two side wiper rings in glass-filled polyacetal resin.
This system doesn't need anti-extrusion supports, Thanks to the high modulus of elasticity and the hardness of the central element higher hardness then Nitrile rubber NBR.
The friction (first operation and in working condition) is low thanks to the particular geometric shape of the seal.

Technical data

Pressure: *from 0 to 300 Bar with peaks up to 400 Bar at 60° C.*
Speed: *0.8 m/s*
Temperature: *from – 30° C to + 100 ° C*
Fluids: *mineral oils*
(see table 1, page 12)

Material

The materials used for the construction of this type of seal are:
- polyurethane for the central element, hardness 93 Shore A, compound reference C0
- glass-filled polyacetal resin (POM) for the side elements
Compound reference: CX

Assembling

This seal can be assembled both in closed groove on a mono-block piston and in open groove on a two-part piston.
Avoid machining scores on the piston which may damage the sealing during the installation.

KDSP



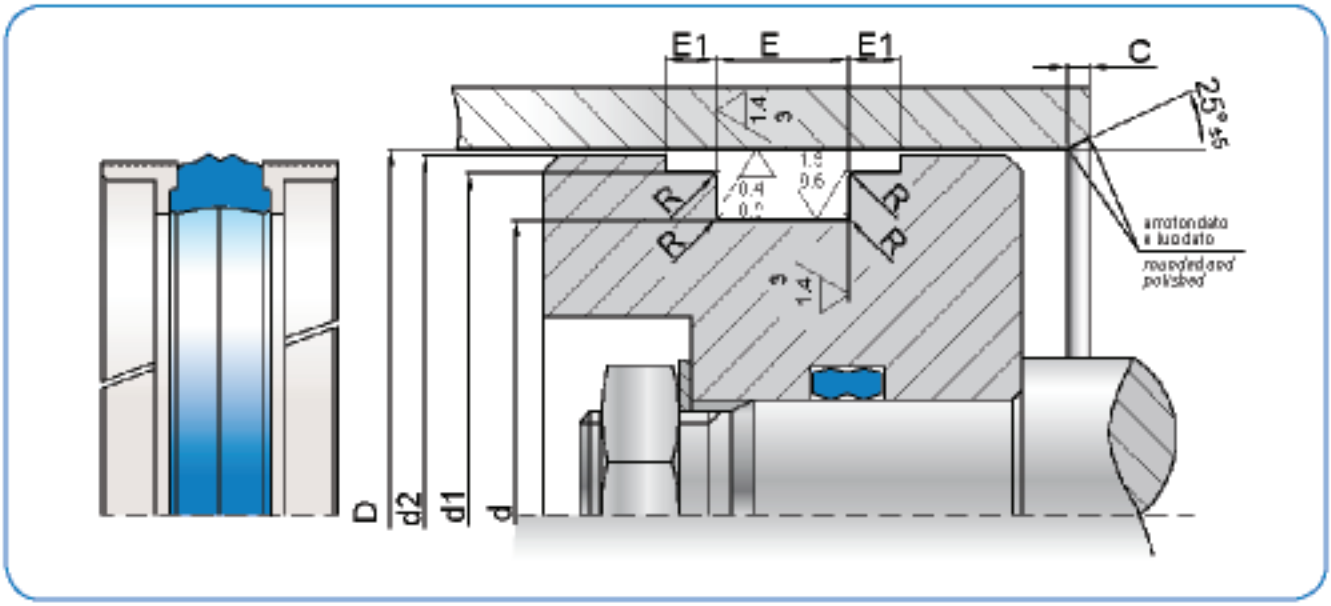

PSA
PAE
PSH
RR
PSO
PSQ
TPD
KDSA
KDSB
KDSP
KDAE

	D_{H9}	d_{h9}	$E_{+0,2}$	d_{3h9}	$d_{2\pm0,2}$	$E_{2\ 0/+0,1}$	R	C	ART / *ITEM*
*	25,0	15,0	12,5	22,0	24,0	4,0	0,4	5,0	KDSP 0250 0150 125 CX
*	25,0	17,0	10,0	22,0	24,0	4,0	0,4	5,0	KDSP 0250 0170 100 CX
*	32,0	22,0	12,5	29,0	31,0	4,0	0,4	5,0	KDSP 0320 0220 125 CX
*	32,0	24,0	10,0	29,0	31,0	4,0	0,4	5,0	KDSP 0320 0240 100 CX
*	40,0	30,0	12,5	36,0	38,0	4,0	0,4	5,0	KDSP 0400 0300 125 CX
*	40,0	32,0	10,0	37,0	39,0	4,0	0,4	5,0	KDSP 0400 0320 100 CX
*	50,0	35,0	20,0	46,0	48,5	5,0	0,4	5,0	KDSP 0500 0350 200 CX
*	50,0	40,0	12,5	47,0	49,0	4,0	0,4	5,0	KDSP 0500 0400 125 CX
*	55,0	45,0	12,5	52,0	54,0	4,0	0,4	5,0	KDSP 0550 0450 125 CX
*	63,0	48,0	20,0	59,0	62,0	5,0	0,4	5,0	KDSP 0630 0480 200 CX
*	63,0	53,0	12,5	60,0	62,0	4,0	0,4	5,0	KDSP 0630 0530 125 CX
*	70,0	55,0	20,0	66,0	68,5	5,0	0,4	5,0	KDSP 0700 0550 200 CX
	70,0	60,0	12,5	67,0	69,0	4,0	0,4	5,0	KDSP 0700 0600 125 CX
*	80,0	65,0	20,0	76,0	78,5	5,0	0,4	5,0	KDSP 0800 0650 200 CX
	80,0	70,0	12,5	77,0	79,0	4,0	0,4	5,0	KDSP 0800 0700 125 CX
*	90,0	75,0	20,0	86,0	88,5	5,0	0,4	5,0	KDSP 0900 0750 200 CX
	90,0	80,0	12,5	86,0	88,5	5,0	0,4	5,0	KDSP 0900 0800 125 CX
*	100,0	85,0	20,0	96,0	98,5	5,0	0,4	5,0	KDSP 1000 0850 200 CX
	100,0	90,0	12,5	96,0	98,5	5,0	0,4	5,0	KDSP 1000 0900 125 CX

* ISO 6547

Nota: altre dimensioni non a catalogo a richiesta. Consultare il nostro ufficio tecnico.

Remark: please contact our technical dept. for further dimensions not included in the catalogue.

OLEODINAMICA
HYDRAULIC



KDAE

TENUTA PISTONE COMPATTA TIPO KDAE

Descrizione

Sempre tra le tenute pistone compatte, la guarnizione KDAE nasce con un elemento centrale in poliuretano e due anelli antiestrusione ai lati.
L'assemblaggio combinato del poliuretano ad alto modulo elastico, con due anelli in elastomero con elevata durezza, rendono la tenuta molto stabile anche alle alte pressioni.
Paragonata alla gomma, l'abrasione risulta molto inferiore con l'utilizzo del poliuretano aumentandone in questo caso la durata del pistone stesso.
L'attrito di primo distacco ed in esercizio, per lo speciale profilo geometrico della tenuta, è maggiormente performante rispetto alla guarnizione in NBR.

Dati tecnici

Pressione: da 0 a 400 bar
Velocità: < 0,8 m/s
Temperatura: da – 30° C a + 100° C
con punte fino a 110° C
Fluidi: oli a base minerale
(vedi tabella 1 a pagina 12)

Materiale

I materiali utilizzati per la costruzione di questo tipo di tenuta sono i seguenti :
- elemento centrale in poliuretano di durezza 93 Shore A Codice materiale tipo C0.
- gli anelli antiestrusione laterali in termoplastico di durezza 63 Shore D Codice materiale tipo L2

Codice materiale: CR

Montaggio

Il montaggio di questa tenuta può essere eseguito sia in cava chiusa su pistone monoblocco, sia in cava aperta su pistone in due pezzi.
E' importante che il pistone non presenti bave di lavorazione meccanica che andrebbero a danneggiare la tenuta durante il montaggio.
E' consigliato ingrassare il pistone per facilitare il montaggio.

KDAE TYPE COMPACT PISTON SEAL

Description

The KDAE compact piston seal series type is designed with a central polyurethane element and two side anti-extrusion rings.
The assembling between the polyurethane element with high elastic modulus and the two elastomer rings with high hardness enhances stability of the sealing even at heavy duty applications.
Compared to rubber, the abrasion is also reduced due to the use of polyurethane, therefore extending the life of the seal.
The friction (first operation and in working condition) is also considerably reduced, due to geometric shape of the seal, having better performance than NBR.

Technical data

Pressure: *from 0 to 400 bar*
Speed: *< 0.8 m/s*
Temperature: *from – 30° C to + 100 °C with peaks up to + 110° C*
Fluids: *mineral oils*
(see table 1, page 12)

Material

The materials used for the construction of this type of seal are:
- polyurethane for the central element, hardness 93 Shore A (C0)
- the backup rings in TPE elastomer 63 Shore D (L2)
Compound reference: CR

Assembling

This seal can be assembled both in closed groove on a mono-block piston and in open groove on a two-part piston.
Avoid machining scores on the piston which May damage the sealing during the installation
The use of grease in the piston is recommended for easier assembling.

KDAE



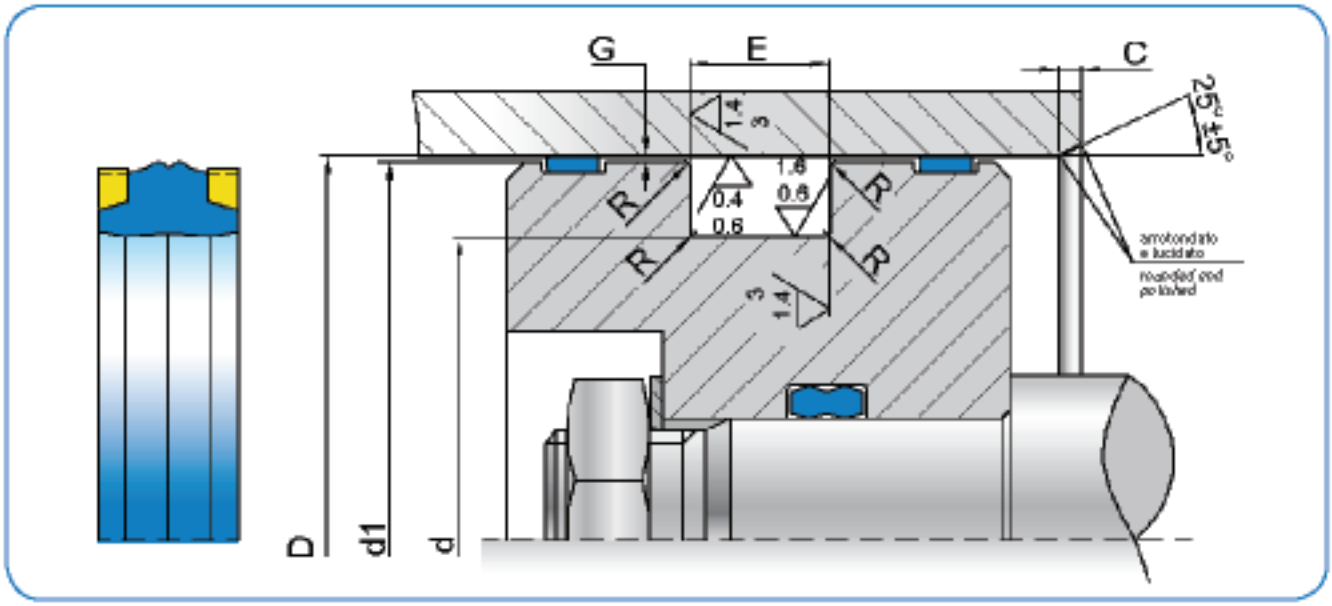

D_{H9}	d_{h9}	$E_{+0,2}$	C	ART / *ITEM*
50,0	36,0	9,0	4,0	KDAE 0500 0360 090 CR
50,0	38,0	10,0	4,0	KDAE 0500 0380 100 CR
55,0	41,0	9,0	4,0	KDAE 0550 0410 090 CR
60,0	46,0	9,0	4,0	KDAE 0600 0460 090 CR
63,0	48,0	11,0	4,0	KDAE 0630 0480 110 CR
63,0	51,0	10,0	4,0	KDAE 0630 0510 100 CR
65,0	50,0	11,0	4,0	KDAE 0650 0500 110 CR
70,0	53,0	14,0	4,0	KDAE 0700 0530 140 CR
70,0	55,0	11,0	4,0	KDAE 0700 0550 110 CR
75,0	60,0	11,0	4,0	KDAE 0750 0600 110 CR
80,0	63,0	14,0	4,0	KDAE 0800 0630 140 CR
80,0	65,0	11,0	4,0	KDAE 0800 0650 110 CR
85,0	70,0	11,0	4,0	KDAE 0850 0700 110 CR
90,0	73,0	14,0	5,0	KDAE 0900 0730 140 CR
90,0	75,0	11,0	5,0	KDAE 0900 0750 110 CR

D_{H9}	d_{h9}	$E_{+0,2}$	C	ART / *ITEM*
95,0	80,0	11,0	5,0	KDAE 0950 0800 110 CR
100,0	83,0	14,0	5,0	KDAE 1000 0830 140 CR
100,0	85,0	12,5	5,0	KDAE 1000 0850 125 CR
105,0	88,0	14,0	5,0	KDAE 1050 0880 140 CR
105,0	90,0	12,5	5,0	KDAE 1050 0900 125 CR
110,0	93,0	14,0	5,0	KDAE 1100 0930 140 CR
110,0	95,0	12,5	5,0	KDAE 1100 0950 125 CR
115,0	98,0	14,0	5,0	KDAE 1150 0980 140 CR
115,0	100,0	12,5	5,0	KDAE 1150 1000 125 CR
120,0	103,0	14,0	5,0	KDAE 1200 1030 140 CR
120,0	105,0	12,5	5,0	KDAE 1200 1050 125 CR
125,0	108,0	14,0	5,0	KDAE 1250 1080 140 CR

Nota: altre dimensioni non a catalogo a richiesta. Consultare il nostro ufficio tecnico.

Remark: please contact our technical dept. for further dimensions not included in the catalogue.



HIS

ANELLI GUIDA INTERNO TIPO HIS

Descrizione

I pattini di guida tipo HIS, hanno la funzione di mantenere in asse tutto il sistema cilindro (stelocon testata, pistone con camicia). Svolgono una funzion importante aiutando la tenuta stelo, il raschiatore e la tenuta pistone a lavorare senza disallinementi evitando allo stesso tempo il contatto tra le parti metalliche. Il materiale con un coefficiente di attito molto basso non crea perdite di carico (linearità). Sopporta deformazioni sotto carico elevate avendo un punto di rammollimento vicino al punto di fusion (lavora in esercizio a 115° C). Per facilitare la scelta della guida pistone o stelo consigliamo questa formula per conoscere l'altezza della guida da inserire nel sistema.

$h = \frac{Fx2}{DxQ}$ per pistone e $h = \frac{Fx2}{dxQ}$ per stelo

Dove:
h = altezza guida in mm.
F = forza radiale applicata
Q = forza radiale sopportata dal materiale
D = diametro camicia
d = diametro stelo

Dati tecnici

Velocità: < 0,8 m/s
Temperatura: da - 40° C a + 115° C
Carico radiale Q:35 N/mm2 a temperatura di 60° C
Fluidi: oli e fluidi a base minerale
(vedi tabella 1 a pagina 12)

Materiale

Il materiale è una resina poliacetalica rinforzatacon fibra di vetro.
Per temperature di esercizio superiori ai 115° C il materiale è una resina poliammidica rinforzata.
Codice materiale per temp < 115° C: R0
Codice materiale per temp > 115° C: R1

Montaggio

Il montaggio si esegue facilmente essendo la guida tagliata ed avendo un'ottima elasticità.
La presenza sui due lati di smussi facilita l'inserimento dello stelo.

HIS TYPE INTERNAL WEAR RING

Description

The HIS wear rings have been developed in order to keep all the parts of the cylinder aligned (the rod with the head, the piston with the bore).
They play an important role as they help the rod seal, the wiper and the piston seal working without any misalignments and at the same time they prevent any contact between the metal parts. The material, which has a very low friction factor, dos not cause load losses (linearity).
It endures deformations under heavy loads, as the softening point is close to the fusion point (it works at 115° C). For an easier choice of the piston orrod guide, we suggest the use of this formula to findthe wear ring length.

$h = \frac{Fx2}{DxQ}$ *for the piston and* $h = \frac{Fx2}{dxQ}$ *for the rod*

Where:
h = wear ring length in mm.
F = radial force applied
Q = radial force endured by the material
D = bore diameter
d = rod diameter

Technical data

Speed: < 0,8 m/s
Temperature: from - 40° C to + 115° C
Radial load Q: 35 N/mm2 at a temperature of 60° C
Fluids: mineral oils and fluids
(see table 1, page 12)

Material

The material is a polyacetalic resin reinforced wit fibreglass.
For working temperatures higher than 115° C, the material is a reinforced polyamidic resin.
Compound reference for temp < 115° C: R0
Compound reference for temp > 115° C: R1

Assembling

The assembling can be easily done since the wear ring is cut and extremely elastic.
The chamfers on both sides have been studied to better insert the wear ring in the rod.

HIS



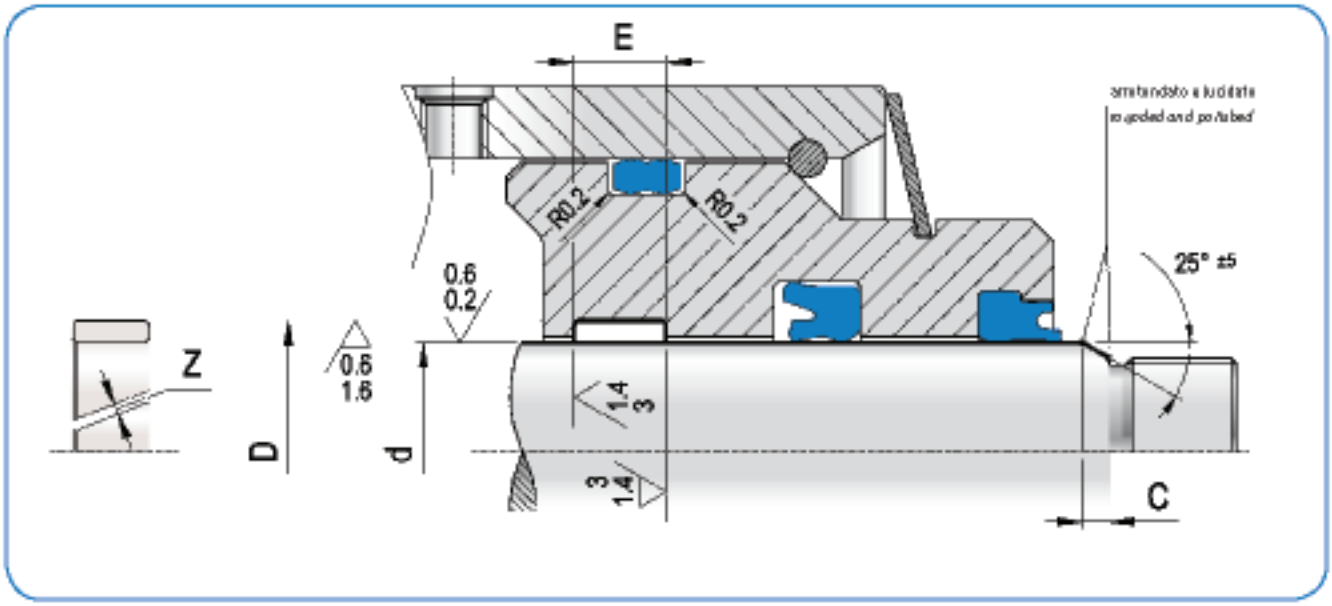

diametri d-D *diameters*	0 - 50	51 - 100	101 - 150	151 - 300
z. mm ≥	2,0	2,5	3,0	3,5

d_{h9}	$D\ ^{0}_{+0,05}$	$E_{+0,2}$	C	ART / *ITEM*
12,0	16,0	9,6	>3	HIS 0120 0160 096 R0
14,0	18,0	9,6	>3	HIS 0140 0180 096 R0
16,0	20,0	9,6	>3	HIS 0160 0200 096 R0
18,0	22,0	9,6	>3	HIS 0180 0220 096 R0
20,0	24,0	9,6	>3	HIS 0200 0240 096 R0
20,0	25,0	5,6	>3	HIS 0200 0250 056 R0
20,0	25,0	9,7	>3	HIS 0200 0250 097 R0
22,0	26,0	9,6	>3	HIS 0220 0260 096 R0
22,0	27,0	5,6	>3	HIS 0220 0270 056 R0
22,0	27,0	9,7	>3	HIS 0220 0270 097 R0
25,0	29,0	9,6	>3	HIS 0250 0290 096 R0
25,0	30,0	5,6	>3	HIS 0250 0300 056 R0
25,0	30,0	9,7	>3	HIS 0250 0300 097 R0
26,0	30,0	9,6	>3	HIS 0260 0300 096 R0
27,0	32,0	5,6	>3	HIS 0270 0320 056 R0
27,0	32,0	9,7	>3	HIS 0270 0320 097 R0
28,0	32,0	9,6	>3	HIS 0280 0320 096 R0
28,0	33,0	5,6	>3	HIS 0280 0330 056 R0
28,0	33,0	9,7	>3	HIS 0280 0330 097 R0
30,0	34,0	9,6	>3	HIS 0300 0340 096 R0
30,0	35,0	5,6	>3	HIS 0300 0350 056 R0
30,0	35,0	9,7	>3	HIS 0300 0350 097 R0
32,0	36,0	9,6	>3	HIS 0320 0360 096 R0
32,0	37,0	5,6	>3	HIS 0320 0370 056 R0

d_{h9}	$D\ ^{0}_{+0,05}$	$E_{+0,2}$	C	ART / *ITEM*
32,0	37,0	9,7	>3	HIS 0320 0370 097 R0
35,0	39,0	9,6	>3	HIS 0350 0390 096 R0
35,0	40,0	5,6	>3	HIS 0350 0400 056 R0
35,0	40,0	9,7	>3	HIS 0350 0400 097 R0
36,0	40,0	9,6	>3	HIS 0360 0400 096 R0
36,0	41,0	5,6	>3	HIS 0360 0410 056 R0
36,0	41,0	9,7	>3	HIS 0360 0410 097 R0
38,0	42,0	9,6	>3	HIS 0380 0420 096 R0
40,0	44,0	9,6	>3	HIS 0400 0440 096 R0
40,0	45,0	5,6	>3	HIS 0400 0450 056 R0
40,0	45,0	9,7	>3	HIS 0400 0450 097 R0
40,0	45,0	15,0	>3	HIS 0400 0450 150 R0
42,0	46,0	9,6	>3	HIS 0420 0460 096 R0
43,0	48,0	5,6	>3	HIS 0430 0480 056 R0
45,0	50,0	5,6	>3	HIS 0450 0500 056 R0
45,0	50,0	9,7	>3	HIS 0450 0500 097 R0
45,0	50,0	15,0	>3	HIS 0450 0500 150 R0
45,0	51,0	9,6	>3	HIS 0450 0510 096 R0
46,0	52,0	9,6	>3	HIS 0460 0520 096 R0
47,0	52,0	5,6	>3	HIS 0470 0520 056 R0
47,0	52,0	9,7	>3	HIS 0470 0520 097 R0
48,0	54,0	9,6	>3	HIS 0480 0540 096 R0
50,0	55,0	5,6	>3	HIS 0500 0550 056 R0
50,0	55,0	9,7	>3	HIS 0500 0550 097 R0



HIS

d_{h9}	$D_{+0,05}^{-0}$	$E_{+0,2}$	C	ART / *ITEM*
50,0	55,0	15,0	>3	HIS 0500 0550 150 R0
50,0	56,0	9,6	>3	HIS 0500 0560 096 R0
55,0	60,0	5,6	>3	HIS 0550 0600 056 R0
55,0	60,0	9,7	>3	HIS 0550 0600 097 R0
55,0	60,0	15,0	>3	HIS 0550 0600 150 R0
55,0	61,0	9,6	>3	HIS 0550 0610 096 R0
56,0	61,0	5,6	>3	HIS 0560 0610 056 R0
56,0	61,0	9,7	>3	HIS 0560 0610 097 R0
56,0	62,0	12,8	>3	HIS 0560 0620 128 R0
58,0	63,0	5,6	>3	HIS 0580 0630 056 R0
58,0	63,0	9,7	>3	HIS 0580 0630 097 R0
60,0	65,0	5,6	>3	HIS 0600 0650 056 R0
60,0	65,0	9,7	>3	HIS 0600 0650 097 R0
60,0	65,0	15,0	>3	HIS 0600 0650 150 R0
60,0	66,0	12,8	>3	HIS 0600 0660 128 R0
63,0	68,0	5,6	>3	HIS 0630 0680 056 R0
63,0	68,0	9,7	>3	HIS 0630 0680 097 R0
63,0	69,0	12,8	>3	HIS 0630 0690 128 R0
65,0	70,0	5,6	>3	HIS 0650 0700 056 R0
65,0	70,0	9,7	>3	HIS 0650 0700 097 R0
65,0	70,0	15,0	>3	HIS 0650 0700 150 R0
65,0	71,0	12,8	>3	HIS 0650 0710 128 R0
67,0	72,0	5,6	>3	HIS 0670 0720 056 R0
70,0	75,0	5,6	>3	HIS 0700 0750 056 R0
70,0	75,0	9,7	>3	HIS 0700 0750 097 R0
70,0	75,0	15,0	>3	HIS 0700 0750 150 R0
70,0	76,0	12,8	>3	HIS 0700 0760 128 R0
72,0	78,0	12,8	>3	HIS 0720 0780 128 R0
75,0	80,0	5,6	>4	HIS 0750 0800 056 R0
75,0	80,0	9,7	>4	HIS 0750 0800 097 R0
75,0	80,0	15,0	>4	HIS 0750 0800 150 R0
75,0	81,0	12,8	>4	HIS 0750 0810 128 R0
76,0	82,0	12,8	>4	HIS 0760 0820 128 R0
80,0	85,0	5,6	>4	HIS 0800 0850 056 R0
80,0	85,0	9,7	>4	HIS 0800 0850 097 R0
80,0	85,0	15,0	>4	HIS 0800 0850 150 R0
80,0	86,0	12,8	>4	HIS 0800 0860 128 R0
85,0	90,0	5,6	>4	HIS 0850 0900 056 R0
85,0	90,0	9,7	>4	HIS 0850 0900 097 R0
85,0	90,0	15,0	>4	HIS 0850 0900 150 R0
85,0	91,0	12,8	>4	HIS 0850 0910 128 R0
90,0	95,0	5,6	>4	HIS 0900 0950 056 R0
90,0	95,0	9,7	>4	HIS 0900 0950 097 R0
90,0	95,0	15,0	>4	HIS 0900 0950 150 R0
90,0	96,0	12,8	>4	HIS 0900 0960 128 R0

d_{h9}	$D_{+0,05}^{-0}$	$E_{+0,2}$	C	ART / *ITEM*
92,0	97,0	5,6	>4	HIS 0920 0970 056 R0
95,0	100,0	5,6	>4	HIS 0950 1000 056 R0
95,0	100,0	9,7	>4	HIS 0950 1000 097 R0
95,0	100,0	15,0	>4	HIS 0950 1000 150 R0
95,0	100,0	20,0	>4	HIS 0950 1000 200 R0
95,0	100,0	25,0	>4	HIS 0950 1000 250 R0
95,0	101,0	12,8	>4	HIS 0950 1010 128 R0
100,0	105,0	5,6	>4	HIS 1000 1050 056 R0
100,0	105,0	9,7	>4	HIS 1000 1050 097 R0
100,0	105,0	15,0	>4	HIS 1000 1050 150 R0
100,0	105,0	20,0	>4	HIS 1000 1050 200 R0
100,0	105,0	25,0	>4	HIS 1000 1050 250 R0
100,0	106,0	12,8	>4	HIS 1000 1060 128 R0
105,0	110,0	9,7	>4	HIS 1050 1100 097 R0
105,0	110,0	15,0	>4	HIS 1050 1100 150 R0
105,0	110,0	20,0	>4	HIS 1050 1100 200 R0
105,0	110,0	25,0	>4	HIS 1050 1100 250 R0
105,0	111,0	12,8	>4	HIS 1050 1110 128 R0
110,0	115,0	9,7	>4	HIS 1100 1150 097 R0
110,0	115,0	15,0	>4	HIS 1100 1150 150 R0
110,0	115,0	20,0	>4	HIS 1100 1150 200 R0
110,0	115,0	25,0	>4	HIS 1100 1150 250 R0
110,0	116,0	12,8	>4	HIS 1100 1160 128 R0
115,0	120,0	9,7	>4	HIS 1150 1200 097 R0
115,0	120,0	15,0	>4	HIS 1150 1200 150 R0
115,0	120,0	20,0	>4	HIS 1150 1200 200 R0
115,0	120,0	25,0	>4	HIS 1150 1200 250 R0
115,0	121,0	12,8	>4	HIS 1150 1210 128 R0
120,0	125,0	9,7	>4	HIS 1200 1250 097 R0
120,0	125,0	15,0	>4	HIS 1200 1250 150 R0
120,0	125,0	20,0	>4	HIS 1200 1250 200 R0
120,0	125,0	25,0	>4	HIS 1200 1250 250 R0
120,0	126,0	12,8	>4	HIS 1200 1260 128 R0
125,0	130,0	15,0	>4	HIS 1250 1300 150 R0
125,0	130,0	20,0	>4	HIS 1250 1300 200 R0
125,0	130,0	25,0	>4	HIS 1250 1300 250 R0
125,0	131,0	12,8	>4	HIS 1250 1310 128 R0
130,0	135,0	15,0	>4	HIS 1300 1350 150 R0
130,0	135,0	20,0	>4	HIS 1300 1350 200 R0
130,0	135,0	25,0	>4	HIS 1300 1350 250 R0
130,0	136,0	12,8	>4	HIS 1300 1360 128 R0
135,0	140,0	15,0	>4	HIS 1350 1400 150 R0
135,0	140,0	20,0	>4	HIS 1350 1400 200 R0
135,0	140,0	25,0	>4	HIS 1350 1400 250 R0
135,0	141,0	12,8	>4	HIS 1350 1410 128 R0

HIS



d_{h9}	$D\ ^{-0}_{+0,05}$	$E\ ^{+0,2}$	C	ART / *ITEM*
140,0	145,0	15,0	> 4	HIS 1400 1450 150 R0
140,0	145,0	20,0	> 4	HIS 1400 1450 200 R0
140,0	145,0	25,0	> 4	HIS 1400 1450 250 R0
140,0	146,0	12,8	> 4	HIS 1400 1460 128 R0
145,0	150,0	15,0	> 4	HIS 1450 1500 150 R0
145,0	150,0	20,0	> 4	HIS 1450 1500 200 R0
145,0	150,0	25,0	> 4	HIS 1450 1500 250 R0
145,0	151,0	12,8	> 4	HIS 1450 1510 128 R0
150,0	156,0	12,8	> 4	HIS 1500 1560 128 R0
155,0	161,0	19,2	> 4	HIS 1550 1610 192 R0
160,0	166,0	19,2	> 5	HIS 1600 1660 192 R0
165,0	171,0	19,2	> 5	HIS 1650 1710 192 R0
170,0	176,0	19,2	> 5	HIS 1700 1760 192 R0
175,0	181,0	19,2	> 5	HIS 1750 1810 192 R0
180,0	186,0	19,2	> 5	HIS 1800 1860 192 R0

d_{h9}	$D\ ^{-0}_{+0,05}$	$E\ ^{+0,2}$	C	ART / *ITEM*
185,0	191,0	19,2	> 5	HIS 1850 1910 192 R0
190,0	196,0	19,2	> 5	HIS 1900 1960 192 R0
195,0	201,0	19,2	> 5	HIS 1950 2100 192 R0
200,0	206,0	19,2	> 5	HIS 2000 2060 192 R0
205,0	211,0	19,2	> 5	HIS 2050 2110 192 R0
210,0	216,0	19,2	> 5	HIS 2100 2160 192 R0
215,0	221,0	19,2	> 5	HIS 2150 2210 192 R0
220,0	226,0	19,2	> 5	HIS 2200 2260 192 R0
225,0	231,0	19,2	> 5	HIS 2250 2310 192 R0
230,0	236,0	19,2	> 5	HIS 2300 2360 192 R0
235,0	241,0	19,2	> 5	HIS 2350 2410 192 R0
240,0	246,0	19,2	> 5	HIS 2400 2460 192 R0
245,0	251,0	19,2	> 5	HIS 2450 2510 192 R0



HES

ANELLI GUIDA ESTERNO TIPO HES

Descrizione

I pattini di guida tipo HES, hanno la funzione di mantenere in asse tutto il sistema cilindro (stelocon testata, pistone con camicia). Svolgono una funzion importante aiutando la tenuta stelo, il raschiatore la tenuta pistone a lavorare senza disallineamenti evitando allo stesso tempo il contatto tra le parti metalliche. Il materiale con un coefficiente di attito molto basso non crea perdite di carico (linearità). Sopporta deformazioni sotto carico elevate avendo un punto di rammollimento vicino al punto di fusion (lavora in esercizio a 115° C). Per facilitare la scelta della guida pistone o stelo consigliamo questa formula per conoscere l'altezza della guida da inserire nel sistema.

$h = \frac{Fx2}{DxQ}$ per pistone e $h = \frac{Fx2}{dxQ}$ per stelo

Dove:
h = altezza guida in mm.
F = forza radiale applicata
Q = forza radiale sopportata dal materiale
D = diametro camicia
d = diametro stelo

Dati tecnici

Velocità:	< 0,8 m/s
Temperatura:	da - 40° C a + 115° C
Carico radiale Q:	35 N/mm2 a temperatura di 60° C
Fluidi:	oli e fluidi a base minerale (vedi tabella 1 a pagina 12)

Materiale

Il materiale è una resina poliacetalica rinforzatacon fibra di vetro. Per temperature di esercizio superiri ai 115° C il materiale è una resina poliammidica rinforzata. Codice materiale per temp < 115°C: R0
Codice materiale per temp > 115°C: R1

Montaggio

Il montaggio si esegue facilmente essendo la guida tagliata ed avendo un'ottima elasticità.
La presenza sui due lati di smussi facilita l'inserimento dello stelo.

HES TYPE EXTERNAL WEAR RING

Description

The HES wear rings have been developed in order to keep all the parts of the cylinder aligned (the rod with the head, the piston with the bore). They play an important role as they help the rod seal, the wiper and the piston seal working without any misalignments and at the same time they prevent any contact between the metal parts. The material, which has a very low friction factor, does not cause load losses (lineaity). It endures deformations under heavy loads, as the softening point is close to the fusion point (it works at 115° C).
For an easier choice of the piston or rod guide, we suggest the use of this formula to find the wear rig length.
$h = \frac{Fx2}{DxQ}$ *for the piston and* $h = \frac{Fx2}{dxQ}$ *for the rod*
Where:
h = wear ring length in mm.
F = radial force applied
Q = radial force endured by the material
D = bore diameter
d = rod diameter

Technical data

Speed:	*< 0,8 m/s*
Temperature:	*from - 40° C to + 115° C*
Radial load Q:	*35 N/mm2 at a temperature of 60° C*
Fluids:	*mineral oils and fluids (see table 1, page 12)*

Material

The material is a polyacetalic resin reinforced wit fibreglass.
For working temperatures higher than 115° C, the material is a reinforced polyamidic resin.
Compound reference for temp < 115°C: R0
Compound reference for temp > 115°C: R1

Assembling

The assembling can be easily done since the wear ring is cut and extremely elastic.
The chamfers on both sides have been studied to better insert the wear ring in the rod.

HES



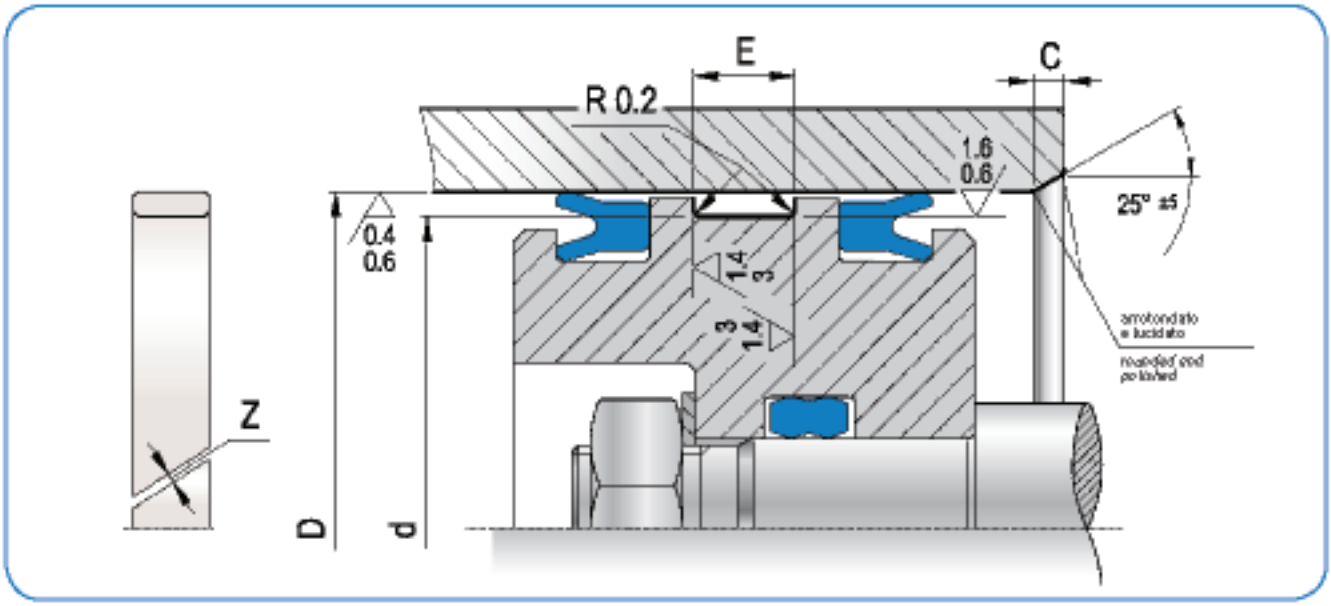

diametri d-D *diameters*	0 - 50	51 - 100	101 - 150	151 - 300
z. mm ≥	2,0	2,5	3,0	3,5

D Hp	d +0 -0,05	E +0,2	C	ART / *ITEM*
16,0	12,0	9,6	>3	HES 0160 0120 096 R0
18,0	14,0	9,6	>3	HES 0180 0140 096 R0
20,0	16,0	9,6	>3	HES 0200 0160 096 R0
22,0	18,0	9,6	>3	HES 0220 0180 096 R0
24,0	20,0	9,6	>3	HES 0240 0200 096 R0
25,0	20,0	5,6	>3	HES 0250 0200 056 R0
25,0	20,0	9,7	>3	HES 0250 0200 097 R0
25,0	21,0	9,6	>3	HES 0250 0210 096 R0
27,0	22,0	5,6	>3	HES 0270 0220 056 R0
27,0	22,0	9,7	>3	HES 0270 0220 097 R0
28,0	24,0	9,6	>3	HES 0280 0240 096 R0
30,0	25,0	5,6	>3	HES 0300 0250 056 R0
30,0	25,0	9,7	>3	HES 0300 0250 097 R0
30,0	26,0	9,6	>3	HES 0300 0260 096 R0
32,0	27,0	5,6	>3	HES 0320 0270 056 R0
32,0	27,0	9,7	>3	HES 0320 0270 097 R0
32,0	28,0	9,6	>3	HES 0320 0280 096 R0
33,0	28,0	5,6	>3	HES 0330 0280 056 R0
33,0	28,0	9,7	>3	HES 0330 0280 097 R0
34,0	30,0	9,6	>3	HES 0340 0300 096 R0
35,0	30,0	5,6	>3	HES 0350 0300 056 R0
35,0	30,0	9,7	>3	HES 0350 0300 097 R0
35,0	31,0	9,6	>3	HES 0350 0310 096 R0
36,0	32,0	9,6	>3	HES 0360 0320 096 R0

D Hp	d +0 -0,05	E +0,2	C	ART / *ITEM*
37,0	32,0	5,6	>3	HES 0370 0320 056 R0
37,0	32,0	9,7	>3	HES 0370 0320 097 R0
40,0	35,0	5,6	>3	HES 0400 0350 056 R0
40,0	35,0	9,7	>3	HES 0400 0350 097 R0
40,0	36,0	9,6	>3	HES 0400 0360 096 R0
41,0	36,0	5,6	>3	HES 0410 0360 056 R0
41,0	36,0	9,7	>3	HES 0410 0360 097 R0
45,0	40,0	5,6	>3	HES 0450 0400 056 R0
45,0	40,0	9,7	>3	HES 0450 0400 097 R0
45,0	40,0	15,0	>3	HES 0450 0400 150 R0
45,0	41,0	9,6	>3	HES 0450 0410 096 R0
48,0	43,0	5,6	>3	HES 0480 0430 056 R0
50,0	44,0	9,6	>3	HES 0500 0440 096 R0
50,0	45,0	5,6	>3	HES 0500 0450 056 R0
50,0	45,0	9,7	>3	HES 0500 0450 097 R0
50,0	45,0	15,0	>3	HES 0500 0450 150 R0
52,0	47,0	5,6	>3	HES 0520 0470 056 R0
52,0	47,0	9,7	>3	HES 0520 0470 097 R0
55,0	49,0	12,8	>3	HES 0550 0490 128 R0
55,0	50,0	5,6	>3	HES 0550 0500 056 R0
55,0	50,0	9,7	>3	HES 0550 0500 097 R0
55,0	50,0	15,0	>3	HES 0550 0500 150 R0
60,0	54,0	12,8	>3	HES 0600 0540 128 R0
60,0	55,0	5,6	>3	HES 0600 0550 056 R0



HES

D H9	d +0 -0,05	E +0,2	C	ART / *ITEM*
60,0	55,0	9,7	>3	HES 0600 0550 097 R0
60,0	55,0	15,0	>3	HES 0600 0550 150 R0
61,0	56,0	5,6	>3	HES 0610 0560 056 R0
61,0	56,0	9,7	>3	HES 0610 0560 097 R0
63,0	57,0	12,8	>3	HES 0630 0570 128 R0
63,0	58,0	5,6	>3	HES 0630 0580 056 R0
63,0	58,0	9,7	>3	HES 0630 0580 097 R0
65,0	59,0	12,8	>3	HES 0650 0590 128 R0
65,0	60,0	5,6	>3	HES 0650 0600 056 R0
65,0	60,0	9,7	>3	HES 0650 0600 097 R0
65,0	60,0	15,0	>3	HES 0650 0600 150 R0
68,0	63,0	5,6	>3	HES 0680 0630 056 R0
68,0	63,0	9,7	>3	HES 0680 0630 097 R0
70,0	64,0	12,8	>3	HES 0700 0640 128 R0
70,0	65,0	5,6	>3	HES 0700 0650 056 R0
70,0	65,0	9,7	>3	HES 0700 0650 097 R0
70,0	65,0	15,0	>3	HES 0700 0650 150 R0
72,0	67,0	5,6	>3	HES 0720 0670 056 R0
75,0	69,0	12,8	>3	HES 0750 0690 128 R0
75,0	70,0	5,6	>3	HES 0750 0700 056 R0
75,0	70,0	9,7	>3	HES 0750 0700 097 R0
75,0	70,0	15,0	>3	HES 0750 0700 150 R0
80,0	74,0	12,8	>4	HES 0800 0740 128 R0
80,0	75,0	5,6	>4	HES 0800 0750 056 R0
80,0	75,0	9,7	>4	HES 0800 0750 097 R0
80,0	75,0	15,0	>4	HES 0800 0750 150 R0
85,0	79,0	12,8	>4	HES 0850 0790 128 R0
85,0	80,0	5,6	>4	HES 0850 0800 056 R0
85,0	80,0	9,7	>4	HES 0850 0800 097 R0
85,0	80,0	15,0	>4	HES 0850 0800 150 R0
90,0	84,0	12,8	>4	HES 0900 0840 128 R0
90,0	85,0	5,6	>4	HES 0900 0850 056 R0
90,0	85,0	9,7	>4	HES 0900 0850 097 R0
90,0	85,0	15,0	>4	HES 0900 0850 150 R0
95,0	89,0	12,8	>4	HES 0950 0890 128 R0
95,0	90,0	5,6	>4	HES 0950 0900 056 R0
95,0	90,0	9,7	>4	HES 0950 0900 097 R0
95,0	90,0	15,0	>4	HES 0950 0900 150 R0
97,0	92,0	5,6	>4	HES 0970 0920 056 R0
100,0	94,0	12,8	>4	HES 1000 0940 128 R0
100,0	95,0	5,6	>4	HES 1000 0950 056 R0
100,0	95,0	9,7	>4	HES 1000 0950 097 R0
100,0	95,0	15,0	>4	HES 1000 0950 150 R0
100,0	95,0	20,0	>4	HES 1000 0950 200 R0
100,0	95,0	25,0	>4	HES 1000 0950 250 R0

D H9	d +0 -0,05	E +0,2	C	ART / *ITEM*
105,0	99,0	12,8	>4	HES 1050 0990 128 R0
105,0	100,0	5,6	>4	HES 1050 1000 056 R0
105,0	100,0	9,7	>4	HES 1050 1000 097 R0
105,0	100,0	15,0	>4	HES 1050 1000 150 R0
105,0	100,0	20,0	>4	HES 1050 1000 200 R0
105,0	100,0	25,0	>4	HES 1050 1000 250 R0
110,0	104,0	12,8	>4	HES 1100 1040 128 R0
110,0	105,0	9,7	>4	HES 1100 1050 097 R0
110,0	105,0	15,0	>4	HES 1100 1050 150 R0
110,0	105,0	20,0	>4	HES 1100 1050 200 R0
110,0	105,0	25,0	>4	HES 1100 1050 250 R0
115,0	109,0	12,8	>4	HES 1150 1090 128 R0
115,0	110,0	9,7	>4	HES 1150 1100 097 R0
115,0	110,0	15,0	>4	HES 1150 1100 150 R0
115,0	110,0	20,0	>4	HES 1150 1100 200 R0
115,0	110,0	25,0	>4	HES 1150 1100 250 R0
120,0	114,0	12,8	>4	HES 1200 1140 128 R0
120,0	115,0	9,7	>4	HES 1200 1150 097 R0
120,0	115,0	15,0	>4	HES 1200 1150 150 R0
120,0	115,0	20,0	>4	HES 1200 1150 200 R0
120,0	115,0	25,0	>4	HES 1200 1150 250 R0
125,0	119,0	12,8	>4	HES 1250 1190 128 R0
125,0	120,0	9,7	>4	HES 1250 1200 097 R0
125,0	120,0	15,0	>4	HES 1250 1200 150 R0
125,0	120,0	20,0	>4	HES 1250 1200 200 R0
125,0	120,0	25,0	>4	HES 1250 1200 250 R0
130,0	124,0	12,8	>4	HES 1300 1240 128 R0
130,0	125,0	15,0	>4	HES 1300 1250 150 R0
130,0	125,0	20,0	>4	HES 1300 1250 200 R0
130,0	125,0	25,0	>4	HES 1300 1250 250 R0
135,0	129,0	12,8	>4	HES 1350 1290 128 R0
135,0	130,0	15,0	>4	HES 1350 1300 150 R0
135,0	130,0	20,0	>4	HES 1350 1300 200 R0
135,0	130,0	25,0	>4	HES 1350 1300 250 R0
140,0	134,0	12,8	>4	HES 1400 1340 128 R0
140,0	135,0	15,0	>4	HES 1400 1350 150 R0
140,0	135,0	20,0	>4	HES 1400 1350 200 R0
140,0	135,0	25,0	>4	HES 1400 1350 250 R0
145,0	139,0	12,8	>4	HES 1450 1390 128 R0
145,0	140,0	15,0	>4	HES 1450 1400 150 R0
145,0	140,0	20,0	>4	HES 1450 1400 200 R0
145,0	140,0	25,0	>4	HES 1450 1400 250 R0
150,0	144,0	12,8	>4	HES 1500 1440 128 R0
150,0	145,0	15,0	>4	HES 1500 1450 150 R0
150,0	145,0	20,0	>4	HES 1500 1450 200 R0

HES



D Hp	d +0 -0,05	E +0,2	C	ART / *ITEM*
150,0	145,0	25,0	>4	HES 1500 1450 250 R0
155,0	149,0	19,2	>4	HES 1550 1490 192 R0
160,0	154,0	19,2	>5	HES 1600 1540 192 R0
165,0	159,0	19,2	>5	HES 1650 1590 192 R0
170,0	164,0	19,2	>5	HES 1700 1640 192 R0
175,0	169,0	19,2	>5	HES 1750 1690 192 R0
180,0	174,0	19,2	>5	HES 1800 1740 192 R0
185,0	179,0	19,2	>5	HES 1850 1790 192 R0
190,0	184,0	19,2	>5	HES 1900 1840 192 R0

D Hp	d +0 -0,05	E +0,2	C	ART / *ITEM*
195,0	189,0	19,2	>5	HES 1950 1890 192 R0
200,0	194,0	19,2	>5	HES 2000 1940 192 R0
210,0	204,0	19,2	>5	HES 2100 2040 192 R0
220,0	214,0	19,2	>5	HES 2200 2140 192 R0
230,0	224,0	19,2	>5	HES 2300 2240 192 R0
240,0	234,0	19,2	>5	HES 2400 2340 192 R0
250,0	244,0	19,2	>5	HES 2500 2440 192 R0

Nota: altre dimensioni non a catalogo a richiesta. Consultare il nostro ufficio tecnico.

Remark: please contact our technical dept. for further dimensions not included in the catalogue.

Anelli guida in PTFE e resina fenolica
PTFE or phenolic fabrics guide rings

Materiale
In funzione delle specifiche esigenze determinate dal carico radiale del cilindro si possono utilizzare questi materiali.
- PTFE caricato bronzo (TM o TV) resistente all'usura, basso atrito, per applicazioni di basso-medio carico,
- tessuto rinforzato con resina fenolica(FR), per sopportare elevati carichi radiali.

Dati Tecnici del PTFE

Velocità:	15 m/s
Temperatura:	da - 50° C a + 160° C, con punte a 200° C.
Carico Radiale:	15 N/mm a 30° C 12 N/mm a 80° C 8 N/mm a 120° C
Fluidi:	Oli a base minerale (vedi tabella 1 a pagina 12)

Montaggio
Il montaggio si esegue facilmente essendo le guide tagliate.

Dati Tecnici della Resina Fenolica

Velocità:	1 m/s
Temperatura:	da - 50° C a + 150° C
Carico Radiale:	120 N/mm a 25° C 60 N/mm a 80° C
Fluidi:	Oli a base minerale

Montaggio
Il montaggio si effettua in cave chiuse essendo la guida tagliata. Il materiale elastico e il profilocon smussi interni ed esterni facilita l'inserimento nel cilindro.

Material
The choice of the material depends on the specific needs arising from the cylinder radial load.

-PTFE with bronze (TM or TV), wear resistant, low friction, for low ando medium load .
-Fabrics-reinforced phenolic (FR) resin, for high radial loads.

PTFE Technical Data

Speed:	15 m/s
Temperature:	from - 50° C a + 160° C, with pick at 200° C.
Radial Load:	15 N/mm at 30° C 12 N/mm at 80° C 8 N/mm at 120° C
Fluids:	Mineral Oil *(see table 1, page 12)*

Assembling
The assembling can be easily done since the wear ring is cut.

Phenolic Resin Technical Data

Speed:	1 m/s
Temperature:	from - 50° C to + 150° C
Radial Load:	120 N/mm at 25° C 60 N/mm at 80° C
Fluids:	Mineral Oil

Assembling
The assembling can be easily done in closed groove since the wear ring is cut and elastic.
The chamfers on both sides have been studied to better insert the wear ring in the cylinder.

Dimensionamento

Utilizzando la seguente formula si possono calcolare le altezze delle guide come illustrato in Fig.1

$$\text{Altezza Guida } T = \frac{C * f}{D * Cr}$$

Dove:

C: carico radiale previsto in N [Newton]
f: fattore di sicurezza [2]
D: diametro stelo o camicia
Cr: carico radiale ammissibile in N\mm
Riferito al materiale (PTFE o Resina fenolica)

Dimensioning

The following formula can be used to calculate the wear ring's height as shown in Pic.1

$$\text{Wear ring's height } T = \frac{C * f}{D * Cr}$$

As:

C: radial load in N [Newton]
f: safety factor [2]
D: rod and bore diameter
Cr: allowable radial load reported materia
(PTFE or Phenolic Resin)

Esempio di calcolo per PTFE

Temperatura: 80[°C]
Carico Radiale: 8000[N]
Diametro stelo o camicia: 80[mm]

$$\text{Altezza Guida } T = \frac{8000 * 2}{80 * 12} = 16.66 \text{ [mm]}$$

Example for PTFE

Temperature: 80[°C]
Radial load: 8000[N]
Rod or Bore diameter: 80[mm]

$$\text{Wear ring's height } T = \frac{8000 * 2}{80 * 12} = 16.66 \text{ [mm]}$$

Esempio di Calcolo per Resina Fenolica

Temperatura: 80[°C]
Carico Radiale: 16000[N]
Diametro stelo o camicia: 80[mm]

$$\text{Altezza Guida } T = \frac{16000 * 2}{80 * 60} = 6,66 \text{ [mm]}$$

Example of Phenolic Resin

Temperature: 80[°C]
Radial loan: 16000[N]
Rod or Bore Diameter: 80[mm]

$$\text{Wear ring's height } T = \frac{16000 * 2}{80 * 60} = 6,66 \text{ [mm]}$$

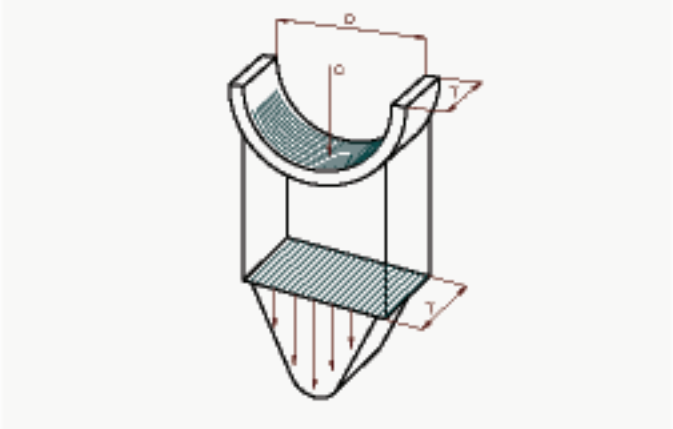



NG

NASTRO GUIDA IN PTFE TIPO NG

Descrizione

Il nastro guida NG in politetrafluoroetilene carico bronzo viene fornito in rotoli dai quali si posso ricavare guide che possono essere intercambiabili con quelle in materiale termoplastico. Vengono applicate sia su stelo che su pistone.
Hanno come caratteristiche principale, la precisione dello spessore e la quasi assenza di attrito. Per la sua inerzia chimica,sono compatibili con molti fluidi.
Possono essere con o senza smussi di invito.

Dati Tecnici

Velocità: <15 m/s
Temperatura: da -50°C a +160°C con punte a 200°C
Fluidi: molti fluidi essendo un materiale con inerzia chimica elevata
(vedi tabella 1 a pagina 12)

Materiale

Il materiale è politetrafluoroetilene (PTFE) con cariche interne di bronzo.
Codice materiale:
TV LBR4030 (verde),
TM LBR4003 (grigio/ marrone)

NG TYPE PTFE WEAR TAPE

Description

NG bronze filled Polytetrafluoroethylene tape is supplied in rolls.
By cutting them is possible to obtain interchangeable guides to replace thermoplastic material.
They can be used for rods or pistons.
Thanks to the properties (thickness accuracy, low friction and chemical resistance) are compatible with many fluids.
They can be with or without chamfers.

Technical Data

Speed: < 15 m/s
Temperature: from -50°C to +160°Ct peaks till 200°C.
Fluidi: many fluids as a material with high chemical inertia
(see table 1, page 12)

Material

The material is bronze filled polytetrafluoroethylene (PTFE).
Compound reference:
TV LBR4030 (green),
TM LBR4003 (dark brown)



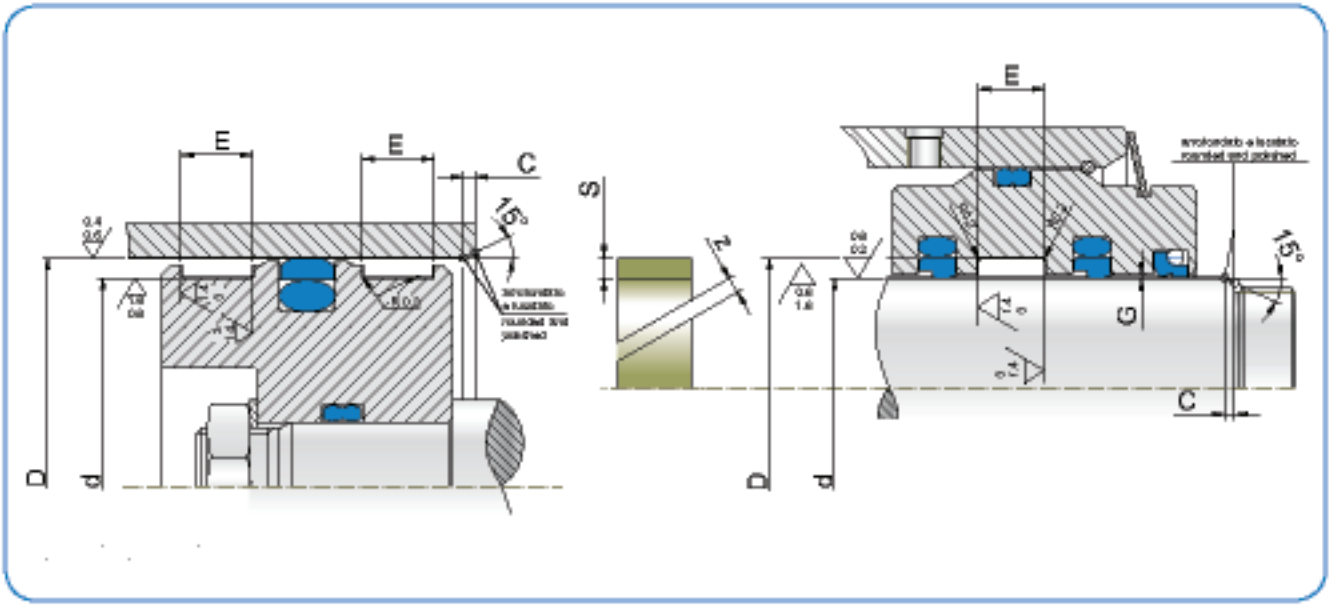

Dimensione sede - *Groove dimension*				
d_{h9}	D_{H9}	$E_{+0.2}$	Spessore anello *Ring thickness* s	z
8-20	d +2s	3,20	1,50	1,0-2,0
15-35	d +2s	4,20	1,50 2,00	1,0-2,0
15-75	d +2s	5,60	1,50 2,00 2,50	1,5-3,5
20-75	d +2s	6,30	1,50 2,00 2,50	1,5-3,5
30-250	d +2s	8,10	1,50 2,00 2,50	2,0-5,0
35-300	d +2s	9,70	1,50 2,00 2,50 3,00	2,0-6,0
120-400	d +2s	15,00	1,50 2,00 2,50 3,00	4,0-8,0
200-900	d +2s	20,00	1,50 2,00 2,50 3,00	4,5-8,0
300-900	d +2s	25,00	2,00 2,50 3,00	6,0-8,0
300-900	d +2s	30,00	2,00 2,50 3,00	6,0-10,0



HPWI

GUIDA TIPO HPWI

Descrizione

Le HPW sono guide in resina fenolica e possono essere intercambiabili con quelle in materiale termoplastico. Vengono applicate su stelo.
Sono ricavate da un tubo per tornitura, il che garantisce un'alta precisione di spessore.
Supportano carichi molto elevati e vengono utilizzate in impieghi molto gravosi.

Dati Tecnici

Velocità:	1 m/s
Temperatura:	da - 40° C a + 130° C
Fluidi:	oli idraulici a base minerale (vedi tabella 1 a pagina 12)

Materiale

Il materiale è una resina fenolica impregnata in trecce di cotone naturale.
Può essere caricata con grafite, PTFE e Bisolfuto di molibdeno (MoS2).

HPWI TYPE WEAR RING

Description

HPWI phenolic resin guides can be interchangeable with other thermoplastic wear rings.
They can be used for rods or pistons.
They are produced from tubes with high thickness accuracy, supporting very high loads and are usedin very heavy conditions.

Technical Data

Speed:	< 1 m/s
Temperature:	from - 40° C a + 130° C
Fluids:	hydraulic mineral oil *(see table 1, page 12)*

Material

The material is a impregnated phenolic resin in natural cotton braids.
Can be filled with graphite, PTFE and molybdenum disulfide (MoS2).



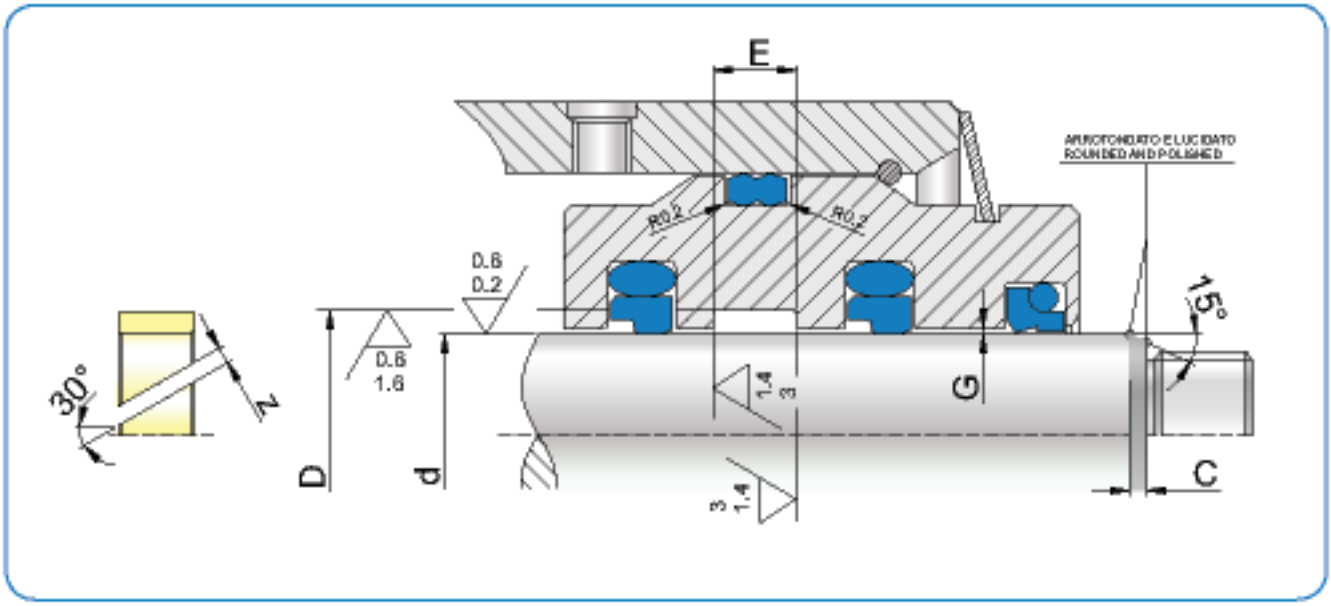

d_{f8}	D_{H9}	E	E	$E_{+0.2}$	ART / ITEM			
40,0	45,0	5,6	9,7	\	HPWI	0400	0450	056-097	50
45,0	50,0	5,6	9,7	\	HPWI	0450	0500	056-097	50
50,0	55,0	5,6	9,7	\	HPWI	0500	0550	056-097	50
55,0	60,0	5,6	9,7	\	HPWI	0550	0600	056-097	50
56,0	61,0	5,6	9,7	\	HPWI	0560	0610	056-097	50
60,0	65,0	5,6	9,7	\	HPWI	0600	0650	056-097	50
65,0	70,0	5,6	9,7	\	HPWI	0650	0700	056-097	50
70,0	75,0	5,6	9,7	\	HPWI	0700	0750	056-097	50
75,0	80,0	5,6	9,7	\	HPWI	0750	0800	056-097	50
80,0	85,0	9,7	12,8	15,0	HPWI	0800	0850	097-128-150	50
85,0	90,0	9,7	12,8	15,0	HPWI	0850	0900	097-128-150	50
90,0	95,0	9,7	12,8	15,0	HPWI	0900	0950	097-128-150	50
95,0	100,0	9,7	12,8	15,0	HPWI	0950	1000	097-128-150	50
100,0	105,0	9,7	12,8	15,0	HPWI	1000	1050	097-128-150	50
105,0	110,0	9,7	12,8	15,0	HPWI	1050	1100	097-128-150	50
110,0	115,0	9,7	12,8	15,0	HPWI	1100	1150	097-128-150	50
115,0	120,0	9,7	12,8	15,0	HPWI	1150	1200	097-128-150	50
120,0	125,0	9,7	12,8	15,0	HPWI	1200	1250	097-128-150	50
125,0	130,0	9,7	12,8	15,0	HPWI	1250	1300	097-128-150	50
130,0	135,0	9,7	12,8	15,0	HPWI	1300	1350	097-128-150	50
135,0	140,0	9,7	12,8	15,0	HPWI	1350	1400	097-128-150	50
140,0	145,0	9,7	12,8	15,0	HPWI	1400	1450	097-128-150	50
145,0	150,0	9,7	12,8	15,0	HPWI	1450	1500	097-128-150	50
150,0	155,0	9,7	12,8	15,0	HPWI	1500	1550	097-128-150	50

d_{f8}	D_{H9}	E	E	$E_{+0.2}$	ART / ITEM			
155,0	160,0	9,7	12,8	15,0	HPWI	1550	1600	097-128-150	50
160,0	165,0	9,7	12,8	15,0	HPWI	1600	1650	097-128-150	50
165,0	170,0	9,7	12,8	15,0	HPWI	1650	1700	097-128-150	50
170,0	175,0	9,7	12,8	15,0	HPWI	1700	1750	097-128-150	50
175,0	180,0	9,7	12,8	15,0	HPWI	1750	1800	097-128-150	50
180,0	185,0	9,7	12,8	15,0	HPWI	1800	1850	097-128-150	50
185,0	190,0	9,7	12,8	15,0	HPWI	1850	1900	097-128-150	50
190,0	195,0	9,7	12,8	15,0	HPWI	1900	1950	097-128-150	50
195,0	200,0	9,7	12,8	15,0	HPWI	1950	2000	097-128-150	50
200,0	205,0	9,7	12,8	15,0	HPWI	2000	2050	097-128-150	50
205,0	210,0	9,7	12,8	15,0	HPWI	2050	2100	097-128-150	50
210,0	215,0	9,7	12,8	15,0	HPWI	2100	2150	097-128-150	50
215,0	220,0	\	15,0	25,0	HPWI	2150	2200	150-250	50
220,0	225,0	\	15,0	25,0	HPWI	2200	2250	150-250	50
225,0	230,0	\	15,0	25,0	HPWI	2250	2300	150-250	50
230,0	235,0	\	15,0	25,0	HPWI	2300	2350	150-250	50
235,0	240,0	\	15,0	25,0	HPWI	2350	2400	150-250	
240,0	245,0	\	15,0	25,0	HPWI	2400	2450	150-250	50
245,0	250,0	\	15,0	25,0	HPWI	2450	2500	150-250	50
250,0	255,0	\	15,0	25,0	HPWI	2500	2550	150-250	50



HPWE

GUIDA TIPO HPWE

Descrizione

Le HPW sono guide in resina fenolica e possono essere intercambiabili con quelle in materiale termoplastico. Vengono applicate su pistone.
Sono ricavate da un tubo per tornitura, il che garantisce un'alta precisione di spessore.
Supportano carichi molto elevati e vengono utilizzate in impieghi molto gravosi.

Dati Tecnici

Velocità:	1 m/s
Temperatura:	da - 40° C a + 130° C
Fluidi:	oli idraulici a base minerale (vedi tabella 1 a pagina 12)

Materiale

Il materiale è una resina fenolica impregnata in trecce di cotone naturale.
Può essere caricata con grafite, PTFE e Bisolfuro di molibdeno (MoS2).

HPWE TYPE WEAR RING

Description

HPWE phenolic resin guides can be interchangeable with other thermoplastic wear rings
They can be used for rods or pistons
They are produced from tubes with high thickness accuracy, supporting very high loads and are used in very heavy conditions.

Technical Data

Speed:	< 1 m/s
Temperature:	from - 40° C a + 130° C
Fluids:	hydraulic mineral oil *(see table 1, page 12)*

Material

The material is a impregnated phenolic resin in natural cotton braids.
Can be filled with graphite, PTFE and molybdenum disulfide (MoS2).

HPWE



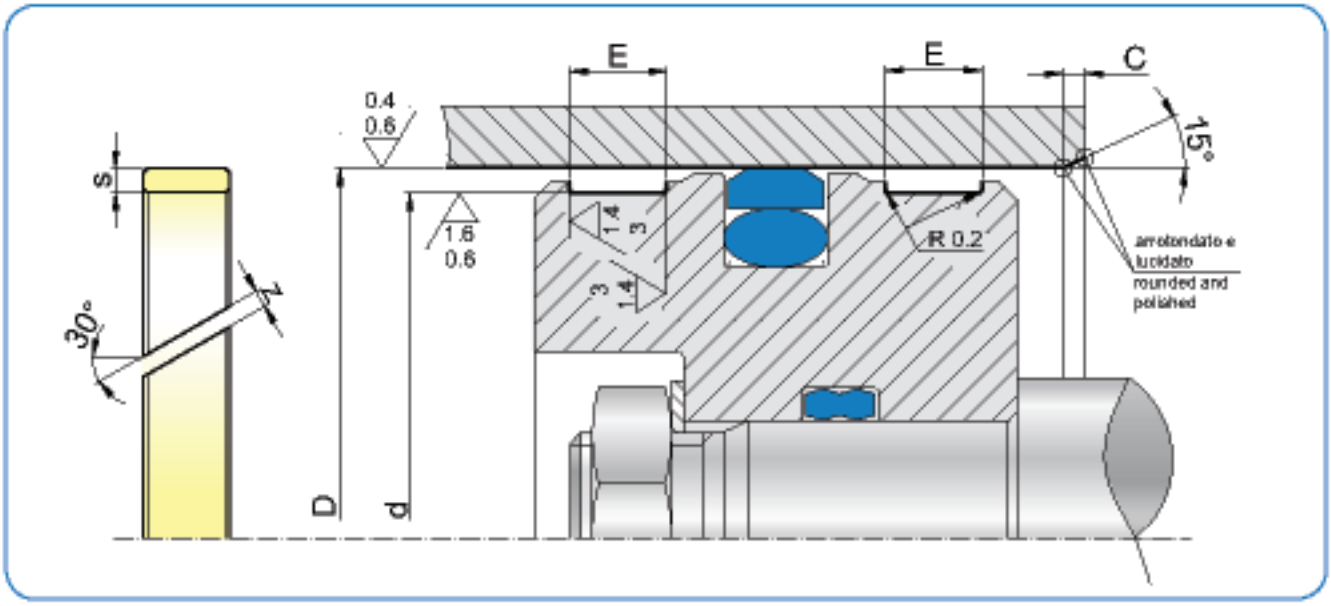

d_{f8}	D_{H9}	E	E	$E_{+0.2}$	ART / ITEM			
45,0	40,0	5,6	9,7	\	HPWE	0450	0400	056-097 S0
50,0	45,0	5,6	9,7	\	HPWE	0500	0450	056-097 S0
55,0	50,0	5,6	9,7	\	HPWE	0550	0500	056-097 S0
60,0	55,0	5,6	9,7	\	HPWE	0600	0550	056-097 S0
61,0	56,0	5,6	9,7	\	HPWE	0610	0560	056-097 S0
65,0	60,0	5,6	9,7	\	HPWE	0650	0600	056-097 S0
70,0	65,0	5,6	9,7	\	HPWE	0700	0650	056-097 S0
75,0	70,0	5,6	9,7	\	HPWE	0750	0700	056-097 S0
80,0	75,0	5,6	9,7	\	HPWE	0800	0750	056-097 S0
85,0	80,0	9,7	12,8	15,0	HPWE	0850	0800	097-128-150 S0
90,0	85,0	9,7	12,8	15,0	HPWE	0900	0850	097-128-150 S0
95,0	90,0	9,7	12,8	15,0	HPWE	0950	0900	097-128-150 S0
100,0	95,0	9,7	12,8	15,0	HPWE	1000	0950	097-128-150 S0
105,0	100,0	9,7	12,8	15,0	HPWE	1050	1000	097-128-150 S0
110,0	105,0	9,7	12,8	15,0	HPWE	1100	1050	097-128-150 S0
115,0	110,0	9,7	12,8	15,0	HPWE	1150	1100	097-128-150 S0
120,0	115,0	9,7	12,8	15,0	HPWE	1200	1150	097-128-150 S0
125,0	120,0	9,7	12,8	15,0	HPWE	1250	1200	097-128-150 S0
130,0	125,0	9,7	12,8	15,0	HPWE	1300	1250	097-128-150 S0
135,0	130,0	9,7	12,8H	15,0	HPWE	1350	1300	097-128-150 S0
140,0	135,0	9,7	12,8	15,0	HPWE	1400	1350	097-128-150 S0
145,0	140,0	9,7	12,8	15,0	HPWE	1500	1400	097-128-150 S0
150,0	145,0	9,7	12,8	15,0	HPWE	1500	1450	097-128-150 S0
155,0	150,0	9,7	12,8	15,0	HPWE	1550	1500	097-128-150 S0

d_{f8}	D_{H9}	E	E	$E_{+0.2}$	ART / ITEM			
160,0	155,0	9,7	12,8	15,0	HPWE	1600	1550	097-128-150 S0
165,0	160,0	9,7	12,8	15,0	HPWE	1650	1600	097-128-150 S0
170,0	165,0	9,7	12,8	15,0	HPWE	1700	1650	097-128-150 S0
175,0	170,0	9,7	12,8	15,0	HPWE	1750	1700	097-128-150 S0
180,0	175,0	9,7	12,8	15,0	HPWE	1800	1750	097-128-150 S0
185,0	180,0	9,7	12,8	15,0	HPWE	1850	1800	097-128-150 S0
190,0	185,0	9,7	12,8	15,0	HPWE	1900	1850	097-128-150 S0
195,0	190,0	9,7	12,8	15,0	HPWE	1950	1900	097-128-150 S0
200,0	195,0	9,7	12,8	15,0	HPWE	2000	1950	097-128-150 S0
205,0	200,0	9,7	12,8	15,0	HPWE	2050	2000	097-128-150 S0
210,0	205,0	9,7	12,8	15,0	HPWE	2100	2050	097-128-150 S0
215,0	210,0	9,7	12,8	15,0	HPWE	2150	2100	097-128-150 S0
220,0	215,0	\	15	25,0	HPWE	2200	2150	150-250 S0
225,0	220,0	\	15	25,0	HPWE	2250	2200	150-250 S0
230,0	225,0	\	15	25,0	HPWE	2300	2250	150-250 S0
235,0	230,0	\	15	25,0	HPWE	2350	2300	150-250 S0
240,0	235,0	\	15	25,0	HPWE	2400	2350	150-250 S0
245,0	240,0	\	15	25,0	HPWE	2450	2400	150-250 S0
250,0	245,0	\	15,0	25,0	HPWE	2500	2450	150-250 S0
255,0	250,0	\	15,0	25,0	HPWE	2550	2500	150-250 S0



WSL

RASCHIATORE STELO TIPO WSL

Descrizione

Il raschiatore tipo WSL ha un labbro raschiante molto flessibile nella parte dinamica e un labbro sporgente, più corto e molto robusto nella parte statica.
Questo profilo speciale, sia dal lato stelo sia dal lato esterno statico, impedisce alle impurità quali sco acqua ed altro, di penetrare, cosa che andrebbe a dan-neggiare la guarnizione di tenuta ed a corrod la parte interna del cilindro.

Dati tecnici

Velocità:	< 1 m/s
Temperatura:	da - 35° C a + 100° C con punte fino a +110°C
Fluidi:	acqua a temperatura ambiente, oli minerali (vedi tabella 1 a pagina 12)

Materiale

I materiali utilizzati sono dei poliuretani che resistono agli agenti atmosferici, con alto modulo elastico e resistenti all'abrasione.
Il materiale standard è di durezza 93 Shore A ± 2.
In alternativa è possibile utilizzare poliuretani d durezza superiore quando esistono condizioni gravose in ambienti molto inquinanti. In questo cas consultare il nostro ufficio tecnico.
Codice materiale: C0

Montaggio

Non presenta particolari problemi essendo in sede semiaperta collocata nella parte più vicina all'esterno del cilindro.
Si raccomanda di eliminare gli spigoli taglienti e le bave per non incidere il raschiatore durante il montaggio.
Per ulteriori informazioni leggere le istruzioni di montaggio a pag. 26.

WSL ROD WIPER

Description

The WSL wiper has a high flexible wiping lip on the dynamic side and a strong, shorter, protruding lip on the static side.
This special profile keeps the rod and the static side where it is
housed free from any impurity, waste or water. Impurities would damage the seal and corrode the inner part of the cylinder.

Technical data

Speed:	*< 1 m/s*
Temperature:	*from - 35° C to + 100° C with peaks til +110° C*
Fluids:	*water at room temperature, mineral oils (see table 1, page 12)*

Material

The material used is a polyurethane with a high modulus of elasticity, low compression set and high wear resistance.
Its hardness is 93 Shore A ± 2.
Compound reference: C0

Assembling

It is not very problematic as it can be done in sem open groove located in the nearest part outside the cylinder.
Remove cutting edges and flashes to avoid the scratching of the wiper during the installation.
For further information please refer to the installation instructions on page 26.



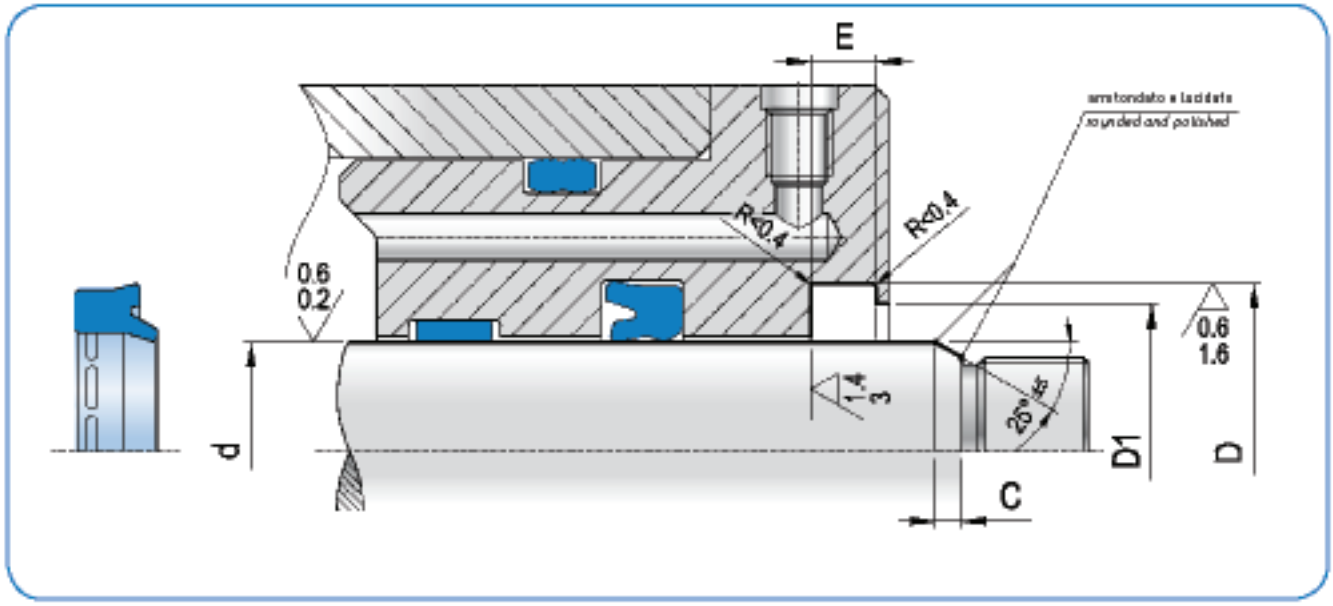

d_{h9}	D_{H10}	$E_{+0,2}$	$D_{1\ 0/+0,2}$	ART / *ITEM*
5,0	12,0	2,8	8,0	WSL 0050 0120 028 C0
6,0	12,0	3,0	9,0	WSL 0060 0120 030 C0
8,0	14,6	3,8	11,0	WSL 0080 0146 038 C0
10,0	15,0	1,0	13,0	WSL 0100 0150 010 C0
10,0	16,6	3,8	13,0	WSL 0100 0166 038 C0
12,0	18,6	3,8	15,0	WSL 0120 0186 038 C0
13,0	19,6	3,8	16,0	WSL 0130 0196 038 C0
14,0	20,6	3,8	17,0	WSL 0140 0206 038 C0
15,0	21,6	3,8	18,0	WSL 0150 0216 038 C0
16,0	22,6	3,8	19,0	WSL 0160 0226 038 C0
18,0	24,6	3,8	21,0	WSL 0180 0246 038 C0
20,0	28,6	5,3	23,0	WSL 0200 0286 053 C0
22,0	30,6	5,3	25,0	WSL 0220 0306 053 C0
24,0	32,6	5,3	27,0	WSL 0240 0326 053 C0
25,0	33,6	5,3	28,0	WSL 0250 0336 053 C0
28,0	36,6	5,3	31,0	WSL 0280 0366 053 C0
30,0	38,0	5,3	33,0	WSL 0300 0380 053 C0
30,0	38,6	5,3	33,0	WSL 0300 0386 053 C0
32,0	40,6	5,3	35,0	WSL 0320 0406 053 C0
35,0	43,6	5,3	38,0	WSL 0350 0436 053 C0
36,0	44,6	5,3	39,0	WSL 0360 0446 053 C0
38,0	46,6	5,3	41,0	WSL 0380 0466 053 C0
40,0	48,6	5,3	43,0	WSL 0400 0486 053 C0
45,0	53,6	5,3	48,0	WSL 0450 0536 053 C0
46,0	54,6	5,3	49,0	WSL 0460 0546 053 C0
50,0	58,0	5,3	53,0	WSL 0500 0580 053 C0
50,0	58,6	5,3	53,0	WSL 0500 0586 053 C0

d_{h9}	D_{H10}	$E_{+0,2}$	$D_{1\ 0/+0,2}$	ART / *ITEM*
55,0	63,6	5,3	58,0	WSL 0550 0636 053 C0
55,0	65,6	5,3	58,0	WSL 0550 0656 053 C0
56,0	64,6	5,3	59,0	WSL 0560 0646 053 C0
60,0	68,0	5,3	63,0	WSL 0600 0680 053 C0
60,0	68,6	5,3	63,0	WSL 0600 0686 053 C0
60,0	70,0	5,0	63,0	WSL 0600 0700 050 C0
61,0	69,6	5,3	64,0	WSL 0610 0696 053 C0
63,0	71,6	5,3	66,0	WSL 0630 0716 053 C0
65,0	73,6	5,3	68,0	WSL 0650 0736 053 C0
70,0	78,6	5,3	73,0	WSL 0700 0786 053 C0
70,0	80,0	5,0	73,0	WSL 0700 0800 050 C0
70,0	82,2	7,1	76,0	WSL 0700 0822 071 C0
70,0	82,6	7,1	76,0	WSL 0700 0826 071 C0
75,0	83,6	5,3	78,0	WSL 0750 0836 053 C0
75,0	87,2	7,1	81,0	WSL 0750 0872 071 C0
76,0	84,6	5,3	79,0	WSL 0760 0846 053 C0
80,0	88,6	5,3	83,0	WSL 0800 0886 053 C0
80,0	90,2	7,1	83,0	WSL 0800 0902 071 C0
80,0	92,6	7,1	83,0	WSL 0800 0926 071 C0
85,0	93,6	5,3	88,0	WSL 0850 0936 053 C0
85,0	97,2	7,1	91,0	WSL 0850 0972 071 C0
90,0	102,2	7,1	96,0	WSL 0900 1022 071 C0
91,0	99,6	5,3	94,0	WSL 0910 0996 053 C0
95,0	107,2	7,1	101,0	WSL 0950 1072 071 C0
100,0	108,6	5,3	103,0	WSL 1000 1086 053 C0
100,0	112,2	7,1	106,0	WSL 1000 1122 071 C0
105,0	113,6	5,3	108,0	WSL 1050 1136 053 C0



WSL

d_{h9}	D_{H10}	$E_{+0,2}$	$D_{1\ e/+0,2}$	ART / *ITEM*
105,0	**117,2**	**7,1**	**111,0**	WSL 1050 1172 071 C0
107,0	**115,6**	**5,3**	**110,0**	WSL 1070 1156 053 C0
110,0	**118,6**	**5,3**	**113,0**	WSL 1100 1186 053 C0
110,0	**122,2**	**7,1**	**116,0**	WSL 1100 1222 071 C0
115,0	**127,2**	**7,1**	**121,0**	WSL 1150 1272 071 C0
120,0	**132,2**	**7,1**	**126,0**	WSL 1200 1322 071 C0
125,0	**137,2**	**7,1**	**131,0**	WSL 1250 1372 071 C0
126,0	**134,6**	**5,3**	**129,0**	WSL 1260 1346 053 C0
130,0	**142,2**	**7,1**	**136,0**	WSL 1300 1422 071 C0
135,0	**147,2**	**7,1**	**141,0**	WSL 1350 1472 071 C0
140,0	**152,2**	**7,1**	**146,0**	WSL 1400 1522 071 C0
140,0	**155,0**	**9,0**	**146,5**	WSL 1400 1550 090 C0
145,0	**157,2**	**7,1**	**151,0**	WSL 1450 1572 071 C0
150,0	**162,2**	**7,1**	**156,0**	WSL 1500 1622 071 C0
160,0	**172,2**	**7,1**	**166,0**	WSL 1600 1722 071 C0

Nota: altre dimensioni non a catalogo a richiestaConsultare il nostro ufficio tecnico.

Remark: please contact our technical dept. for fulfter dimensions not included in the catalogue.

d_{h9}	D_{H10}	$E_{+0,2}$	$D_{1\ e/+0,2}$	ART / *ITEM*
160,0	**175,2**	**10,1**	**168,0**	WSL 1600 1752 101 C0
170,0	**185,2**	**10,1**	**178,0**	WSL 1700 1852 101 C0
180,0	**195,2**	**10,1**	**188,0**	WSL 1800 1952 101 C0
180,0	**200,2**	**10,2**	**183,0**	WSL 1800 2002 102 C0
190,0	**205,2**	**10,1**	**198,0**	WSL 1900 2052 101 C0
200,0	**215,2**	**10,1**	**208,0**	WSL 2000 2152 101 C0
210,0	**225,2**	**10,1**	**218,0**	WSL 2100 2252 101 C0
220,0	**235,2**	**10,1**	**228,0**	WSL 2200 2352 101 C0
230,0	**245,2**	**10,1**	**238,0**	WSL 2300 2452 101 C0
240,0	**255,2**	**10,1**	**248,0**	WSL 2400 2552 101 C0
250,0	**265,2**	**10,1**	**258,0**	WSL 2500 2652 101 C0

WSL





WSG

RASCHIATORE CON STEP TIPO WSG

Descrizione

Il raschiatore tipo WSG ha la funzione di pulire lo stelo al suo rientro, mantenendo all'esterno le impurità.
E' composto da un'anima metallica incollata ad un elemento in poliuretano.
La cava risulta aperta facilitando l'esecuzione della sede.

Dati tecnici

Velocità: < 0,8 m/s
Temperatura: da – 35° C a + 100 ° C con punte fino a 110° C.
Fluidi: agenti atmosferici, acqua a temperatura inferiore a 60° C, oli a base minerale
(vedi tabella 1 a pagina 12)

Materiale

Il materiale del raschiatore è un poliuretano di durezza 93 Shore A e anima in acciaio.
Codice materiale: CA

Montaggio

Il montaggio avviene in cava aperta.
Togliere gli spigoli vivi e le bave per facilitarne l'inserimento.

Attenzione: la cava dove alloggia il raschiatore dee essere in tolleranza di lavorazione come indicato nella colonna D. Il mancato rispetto della misura della tolleranza può causare la fuoriuscita del manufatto durante il movimento.

WSG TYPE WIPER WITH STEP

Description

The function of the WSG wiper is to clean the rod while returning to position, blocking external impurities.
It is made up of a metal core bonded to a polyurethane element.
The groove is open and allows easier design of the seat.

Technical data

Speed: *< 0.8 m/s*
Temperature: *from – 35° C to + 100 ° C with peaks till 110° C.*
Fluids: *atmospheric factors, water at a temperature below 60° C, mineral oils (see table 1, page 12)*

Material

The material of the wiper is a polyurethane with a hardness of 93 Shore A and steel core.
Compound reference: CA

Assembling

The assembling is done in open groove.
Remove flashes and cutting edges to allow better installation of the wiper.

Warning: The housing of the wiper must be within th machining tolerance as shown in column D.
Not observed tolerances may cause the extrusion of the product during the operations.

WSG



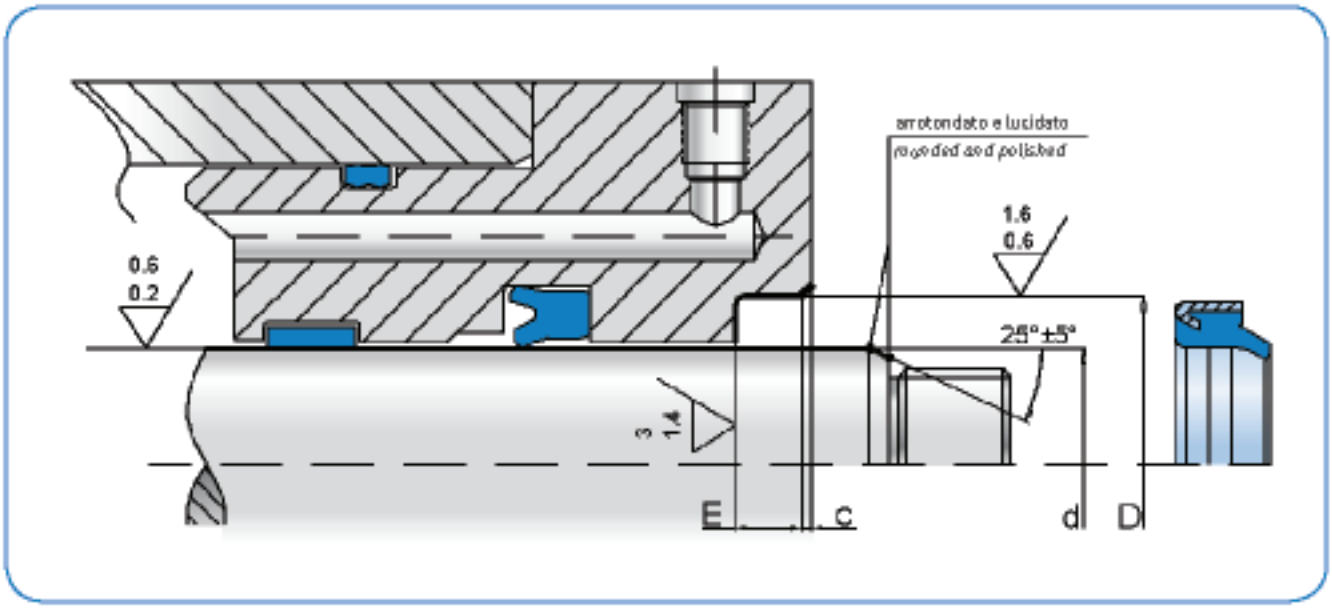

	d_{h9}	D_{H10}	Toll.	$E_{+0,2}$	C	ART / *ITEM*
	20,0	30,0	-0	4,0	0,8	WSG 0200 0300 040 CA
	20,0	30,0	+0,033	5,0	1,0	WSG 0200 0300 050 CA
*	20,0	30,0		7,0	1,5	WSG 0200 0300 070 CA
	22,0	30,0	-0	4,0	0,8	WSG 0220 0300 040 CA
	22,0	32,0	+0,039	5,0	1,0	WSG 0220 0320 050 CA
*	22,0	32,0		7,0	1,5	WSG 0220 0320 070 CA
	25,0	35,0	-0	5,0	1,5	WSG 0250 0350 050 CA
*	25,0	35,0	+0,039	7,0	1,5	WSG 0250 0350 070 CA
	28,0	38,0		5,0	1,0	WSG 0280 0350 050 CA
	28,0	38,0	-0	7,0	1,5	WSG 0280 0380 070 CA
	30,0	40,0	+0,039	5,0	1,0	WSG 0300 0400 050 CA
	30,0	40,0		7,0	1,5	WSG 0300 0400 070 CA
	32,0	42,0	-0	5,0	1,0	WSG 0320 0420 050 CA
	32,0	42,0	+0,039	7,0	1,5	WSG 0320 0420 070 CA
	35,0	45,0		5,0	1,0	WSG 0350 0450 050 CA
*	35,0	45,0	-0	7,0	1,5	WSG 0350 0450 070 CA
	36,0	46,0	+0,039	5,0	1,0	WSG 0360 0460 050 CA
	38,0	48,0		7,0	1,0	WSG 0380 0480 070 CA
	40,0	50,0	-0	5,0	1,0	WSG 0400 0500 050 CA
*	40,0	50,0	+0,046	7,0	1,5	WSG 0400 0500 070 CA
	42,0	52,0		7,0	1,5	WSG 0420 0520 070 CA

	d_{h9}	D_{H10}	Toll.	$E_{+0,2}$	C	ART / *ITEM*
	45,0	55,0	-0	7,0	1,5	WSG 0450 0550 070 CA
	50,0	60,0	+0,046	5,0	1,0	WSG 0500 0600 050 CA
*	50,0	60,0		7,0	1,5	WSG 0500 0600 070 CA
	55,0	65,0	-0	7,0	1,5	WSG 0550 0650 070 CA
*	56,0	66,0	+0,046	7,0	1,5	WSG 0560 0660 070 CA
	60,0	70,0		5,0	1,0	WSG 0600 0700 050 CA
	60,0	70,0	-0	7,0	1,5	WSG 0600 0700 070 CA
	65,0	75,0	0,046	7,0	1,5	WSG 0650 0750 070 CA
*	70,0	80,0		7,0	1,5	WSG 0700 0800 070 CA
	75,0	85,0	-0	7,0	1,5	WSG 0750 0850 070 CA
*	80,0	90,0	+0,054	7,0	1,5	WSG 0800 0900 070 CA
	85,0	95,0		7,0	1,5	WSG 0850 0950 070 CA
*	90,0	100,0	-0	7,0	1,5	WSG 0900 1000 070 CA
	95,0	105,0	+0,054	7,0	1,5	WSG 0950 1050 070 CA
	100,0	110,0		7,0	1,5	WSG 1000 1100 070 CA
	110,0	120,0	-0	7,0	1,5	WSG 1100 1200 070 CA
	120,0	130,0	+0,063	7,0	1,5	WSG 1200 1300 070 CA

* in conformità alle norme ISO 3320 – *in accordance with ISO 3320 norms*



R09

RASCHIATORE TIPO R09

Descrizione

Il raschiatore R09 ha la funzione di pulire lo steb al suo rientro, mantenendo all'esterno le impurita'.
E' composto da un anima metallica rettificata all'esterno e incollata ad un elemento raschianteri NBR.
La cava che alloggia il raschiatore e' aperta , facilitandone il montaggio.

Dati tecnici

Velocità: < 1 [m/s]
Temperatura: - 30 °C ÷ +100 °C
Fluidi: agenti atmosferici,acqua, sabbia ecc. (vedi tabella 1 a pagina 12)

Materiale

Il materiale del raschiatore è in gomma nitrilicaNBR 90 Shore A e anima in acciaio AISI 1010
Codice materiale standard: NG

Montaggio

Il montaggio avviene in cava aperta.
Togliere spigoli vivi e le bave per facilitarne l'inserimento.

Attenzione: la cava dove alloggia il raschiatore dee essere in tolleranza di lavorazione come indicato nella colonna D.
Il mancato rispetto della tolleranza può causare la fuoriuscita del manufatto durante il movimento alternativo lineare.

R09 TYPE WIPER

Description

The function of the R09 wiper is cleaning the rod while return into position, blocking external impurities.
It is made up of an external, grinded metal cage coe part glued to a NBR element.
The groove is open and makes easier the design of the seat.

Technical data

Speed: < 1 [m/s]]
Temperature: - 30 °C ÷ +100 °C mescola NBR
Fluids: atmospheric factors ,water, sand,etc. (see table 1, page 12)

Material

The wiper material is a nitrile rubber NBR 90 Shore A with steel core AISI 1010.
Compound reference: NG

Assembling

The assembling is done in open groove.
Remove flashes and cutting edges to allow better installation of the wiper.

Warning: The housing of the wiper must be within th machining tolerance as shown in column D.
Not observed tolerances may cause the extrusion of the product during the operations.

R09



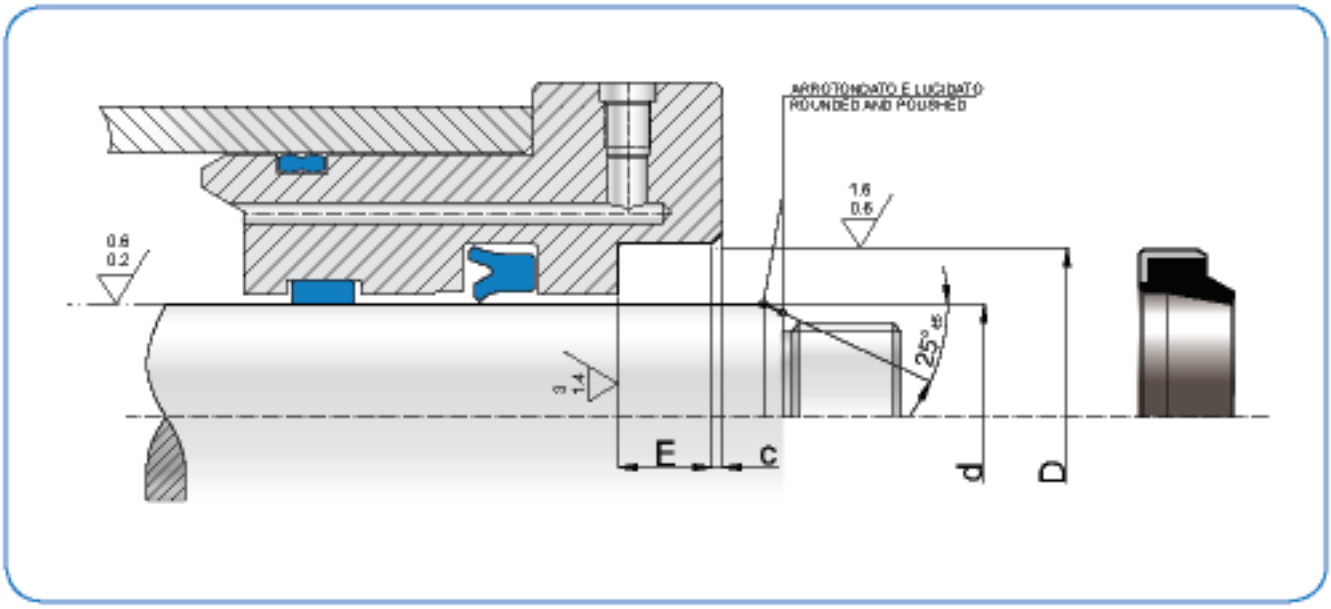

	d_{h9}	D_{H10}	Toll.	$E_{+0,2}$	C	ART / *ITEM*
	20,0	30,0	-0	4,0	0,8	R09 0200 0300 040 CA
	20,0	30,0	+0,033	5,0	1,0	R09 0200 0300 050 CA
*	20,0	30,0		7,0	1,5	R09 0200 0300 070 CA
	22,0	30,0	-0	4,0	0,8	R09 0220 0300 040 CA
	22,0	32,0	+0,039	5,0	1,0	R09 0220 0320 050 CA
*	22,0	32,0		7,0	1,5	R09 0220 0320 070 CA
	25,0	35,0	-0	5,0	1,5	R09 0250 0350 050 CA
*	25,0	35,0	+0,039	7,0	1,5	R09 0250 0350 070 CA
	28,0	38,0		5,0	1,0	R09 0280 0350 050 CA
	28,0	38,0	-0	7,0	1,5	R09 0280 0380 070 CA
	30,0	40,0	+0,039	5,0	1,0	R09 0300 0400 050 CA
	30,0	40,0		7,0	1,5	R09 0300 0400 070 CA
	32,0	42,0	-0	5,0	1,0	R09 0320 0420 050 CA
	32,0	42,0	+0,039	7,0	1,5	R09 0320 0420 070 CA
	35,0	45,0		5,0	1,0	R09 0350 0450 050 CA
*	35,0	45,0	-0	7,0	1,5	R09 0350 0450 070 CA
	36,0	46,0	+0,039	5,0	1,0	R09 0360 0460 050 CA
	38,0	48,0		7,0	1,0	R09 0380 0480 070 CA
	40,0	50,0	-0	5,0	1,0	R09 0400 0500 050 CA
*	40,0	50,0	+0,046	7,0	1,5	R09 0400 0500 070 CA
	42,0	52,0		7,0	1,5	R09 0420 0520 070 CA

	d_{h9}	D_{H10}	Toll.	$E_{+0,2}$	C	ART / *ITEM*
	45,0	55,0	-0	7,0	1,5	R09 0450 0550 070 CA
	50,0	60,0	+0,046	5,0	1,0	R09 0500 0600 050 CA
*	50,0	60,0		7,0	1,5	R09 0500 0600 070 CA
	55,0	65,0	-0	7,0	1,5	R09 0550 0650 070 CA
*	56,0	66,0	+0,046	7,0	1,5	R09 0560 0660 070 CA
	60,0	70,0		5,0	1,0	R09 0600 0700 050 CA
	60,0	70,0	-0	7,0	1,5	R09 0600 0700 070 CA
	65,0	75,0	0,046	7,0	1,5	R09 0650 0750 070 CA
*	70,0	80,0		7,0	1,5	R09 0700 0800 070 CA
	75,0	85,0	-0	7,0	1,5	R09 0750 0850 070 CA
*	80,0	90,0	+0,054	7,0	1,5	R09 0800 0900 070 CA
	85,0	95,0		7,0	1,5	R09 0850 0950 070 CA
*	90,0	100,0	-0	7,0	1,5	R09 0900 1000 070 CA
	95,0	105,0	+0,054	7,0	1,5	R09 0950 1050 070 CA
	100,0	110,0		7,0	1,5	R09 1000 1100 070 CA
	110,0	120,0	-0	7,0	1,5	R09 1100 1200 070 CA
	120,0	130,0	+0,063	7,0	1,5	R09 1200 1300 070 CA



WWS

RASCHIATORE CON STEP TIPO WWS

Descrizione

Il raschiatore tipo WWS a differenza di altri profi, presenta un gradino sul lato statico che serve per agganciarlo alla sede.
Questo facilita il montaggio in automatico del particolare e l'esecuzione meccanica della sede risulta molto semplice.
Ha dei notches nella base interna che hanno la funzione di stabilizzatori e assicurano uno sfiatoalla pressione che potrebbe crearsi a causa di perdite tra guarnizione e raschiatore con conseguente espulsione dalla sede di quest'ultimo.

Dati tecnici

Velocità: < 1 m/s
Temperatura: da - 35° C a + 100° C con punte fino a +110° C
Fluidi: acqua a temperatura ambiente, oli minerali
(vedi tabella 1 a pagina 12)

Materiale

Il materiale utilizzato è un poliuretano molto flessibile anche a basse temperature con una alta resistenza all'abrasione.
Materiale standard poliuretano 90 Shore A (B0) fino al diametro 35mm.
Per diametri maggiori il poliuretano 93 Shore A (C0
Codice materiale per diam≤ 35mm: B0
Codice materiale per diam > 36mm: C0

Montaggio

Essendo in sede semiaperta il montaggio è molto facilitato.
Eliminare le bave e spigoli taglienti nella sede.
Per ulteriori informazioni leggere le istruzioni di montaggio a pag. 26.

WWS WIPER TYPE WITH STEP

Description

The WWS scraper, unlike other profiles, has a stepin the static side which hooks it to the housing.
This helps automated assembling and makes the mechanical construction of the groove extremely easy.
It presents notches in the wiper inner base having stabilisation effect, ensuring good ventilation.
This avoids extrusion problems.

Technical data

Speed: *< 1 m/s*
Temperature: *from - 35° C to + 100° C with peaks til +110° C*
Fluids: *water at room temperature, mineral oils*
(see table 1, page 12)

Material

The material used is a very flexible polyurethane, even at low temperatures, with a high abrasion resistance.
Standard polyurethane 90 Shore A up to diameter 35 mm (B0).
For bigger dimensions standard polyurethane 93 Shore A (C0).
Compound reference diam≤≤35mm: B0
Compound reference diam > 36mm: C0

Assembling

The assembling is much easier since it can be done in semi-open groove.
Remove flashes an/or cutting edges in the housing.
For further information please refer to the installation instructions on page 26.



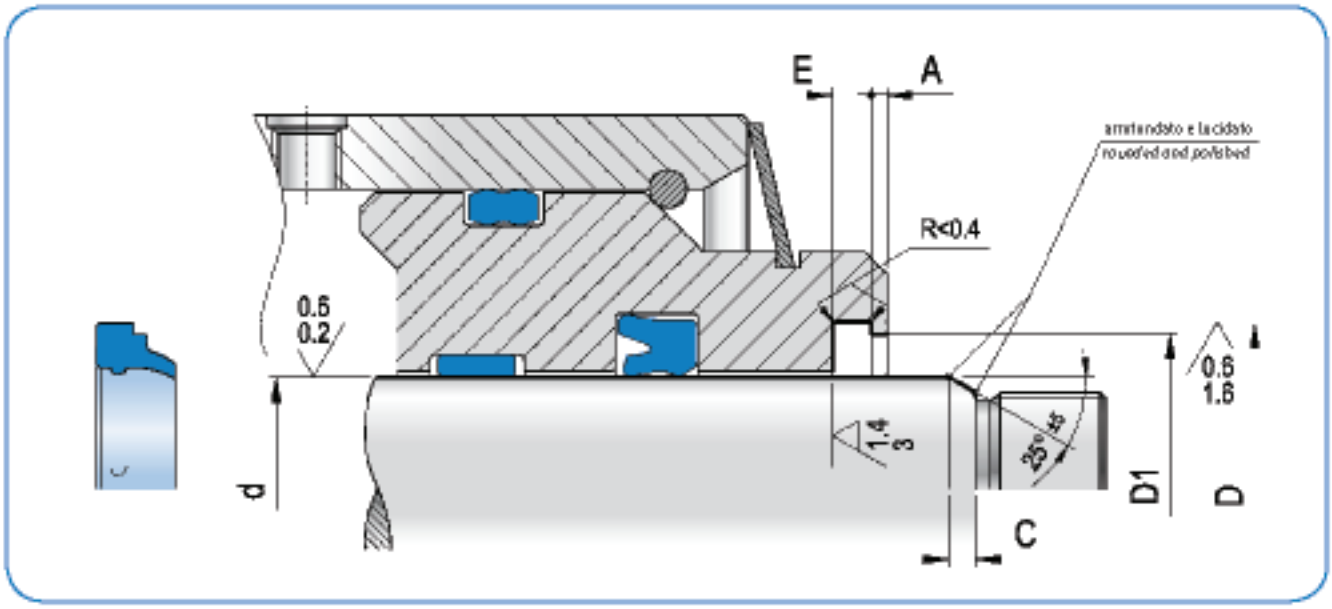

	d_{h9}	D_{H10}	$E_{+0,2}$	$D_{3\ H11}$	Amin.	ART / *ITEM*
*	6,0	10,0	2,0	9,0	1,0	WWS 0060 0100 020 B0
*	8,0	14,0	2,6	12,0	1,0	WWS 0080 0140 026 B0
*	10,0	16,0	2,6	14,0	1,0	WWS 0100 0160 026 B0
*	10,0	18,0	4,0	16,0	1,0	WWS 0100 0180 040 B0
*	12,0	18,0	2,6	16,0	1,0	WWS 0120 0180 026 B0
*	12,0	20,0	4,0	18,0	1,0	WWS 0120 0200 040 B0
*	14,0	20,0	2,6	18,0	1,0	WWS 0140 0200 026 B0
*	14,0	22,0	4,0	20,0	1,0	WWS 0140 0220 040 B0
	15,0	23,0	4,0	21,0	1,0	WWS 0150 0230 040 B0
*	16,0	24,0	4,0	22,0	1,0	WWS 0160 0240 040 B0
*	18,0	26,0	4,0	24,0	1,0	WWS 0180 0260 040 B0
*	20,0	28,0	4,0	26,0	1,0	WWS 0200 0280 040 B0
*	22,0	30,0	4,0	28,0	1,0	WWS 0220 0300 040 B0
	24,0	32,0	4,0	30,0	1,0	WWS 0240 0320 040 B0
*	25,0	33,0	4,0	31,0	1,0	WWS 0250 0330 040 B0
*	28,0	36,0	4,0	34,0	1,0	WWS 0280 0360 040 B0
	30,0	38,0	4,0	36,0	1,0	WWS 0300 0380 040 B0
*	32,0	40,0	4,0	38,0	1,0	WWS 0320 0400 040 B0
	34,0	42,0	4,0	40,0	1,0	WWS 0340 0420 040 B0
	35,0	43,0	4,0	41,0	1,0	WWS 0350 0430 040 B0
*	36,0	44,0	4,0	42,0	1,0	WWS 0360 0440 040 C0
	38,0	46,0	4,0	44,0	1,0	WWS 0380 0460 040 C0
*	40,0	48,0	4,0	46,0	1,0	WWS 0400 0480 040 C0
	42,0	50,0	4,0	48,0	1,0	WWS 0420 0500 040 C0

	d_{h9}	D_{H10}	$E_{+0,2}$	$D_{3\ H11}$	Amin.	ART / *ITEM*
*	45,0	53,0	4,0	51,0	1,0	WWS 0450 0530 040 C0
*	50,0	58,0	4,0	56,0	1,0	WWS 0500 0580 040 C0
	52,0	60,0	4,0	58,0	1,0	WWS 0520 0600 040 C0
	55,0	63,0	4,0	61,0	1,0	WWS 0550 0630 040 C0
*	56,0	64,0	4,0	62,0	1,0	WWS 0560 0640 040 C0
	60,0	68,0	4,0	66,0	1,0	WWS 0600 0680 040 C0
*	63,0	71,0	4,0	69,0	1,0	WWS 0630 0710 040 C0
	63,5	71,5	4,0	69,5	1,0	WWS 0635 0715 040 C0
	65,0	73,0	4,0	71,0	1,0	WWS 0650 0730 040 C0
*	70,0	78,0	4,0	76,0	1,0	WWS 0700 0780 040 C0
	75,0	83,0	4,0	81,0	1,0	WWS 0750 0830 040 C0
*	80,0	88,0	4,0	86,0	1,0	WWS 0800 0880 040 C0
	85,0	93,0	4,0	91,0	1,0	WWS 0850 0930 040 C0
*	90,0	98,0	4,0	96,0	1,0	WWS 0900 0980 040 C0
*	100,0	108,0	4,0	106,0	1,0	WWS 1000 1080 040 C0
	110,0	122,0	5,5	119,0	1,5	WWS 1100 1220 055 C0
	120,0	132,0	5,5	129,0	1,5	WWS 1200 1320 055 C0
*	125,0	137,0	5,5	134,0	1,5	WWS 1250 1370 055 C0
*	140,0	152,0	5,5	149,0	1,5	WWS 1400 1520 055 C0
	150,0	162,0	5,5	159,0	1,5	WWS 1500 1620 055 C0
*	160,0	172,0	5,5	169,0	1,5	WWS 1600 1720 055 C0
*	180,0	192,0	5,5	189,0	1,5	WWS 1800 1920 055 C0

* in conformità alle norme ISO 3320 – *in accordance with ISO 3320 norms*

Nota: altre dimensioni non a catalogo a richiesta. Consultare il nostro ufficio tecnico.

Remark: please contact our technical dept. for further dimensions not included in the catalogue.



WAT

RASCHIATORE ANTI-RIBALTAMENTO TIPO WAT

Descrizione

Il raschiatore tipo WAT ha, grazie allo speciale profilo, la possibilità di autoallinearsi quando lo stelo, durante l'esercizio, è soggetto a forti disallineamenti.
Presenta due labbri che lo fanno assomigliare a una tenuta: il labbro dinamico raschiante più lungo e molto flessibile, il labbro statico più corto, cheevita, appoggiandosi sul gradino trattenitore, l'entrata dall'esterno delle impurità.

Dati tecnici

Velocità: < 1 m/s
Temperatura: da - 35° C a + 100° C con punte fino a +110° C
Fluidi: acqua a temperatura ambiente, oli a base minerale
(vedi tabella 1 a pagina 12)

Materiale

I materiali utilizzati sono dei poliuretani che resistono agli agenti atmosferici con alto modulo elastico e resistenti all'abrasione.
Il materiale standard è di durezza 93 Shore A ± 2.
In alternativa è possibile utilizzare poliuretani di durezza superiore quando esistono condizioni gravose in ambienti molto inquinati. In questo caso consultare il nostro ufficio tecnico.
Codice materiale: C0

Montaggio

Il montaggio risulta molto semplice essendo la sede semiaperta.
Eliminare gli spigoli taglienti e le bave nella sede.
Per ulteriori informazioni leggere le istruzioni di montaggio a pag. 26.

WAT NO-TWISTING TYPE WIPER

Description

The WAT wiper can be self-aligned in case of rod misalignment during operations, thanks to its special profile and design,.
It presents two lips and it's similar to a seal: the scraping lip is longer, very flexible and dynamicthe static lip is shorter and stops the impurity sticking to the blocking step.

Technical data

Speed: < 1 m/s
Temperature: from - 35° C to + 100° C with peaks till +110° C
Fluids: water at room temperature mineral oils (see table 1, page 12)

Material

The proposed material is a "C0" type polyurethane, with high elasticity modulus, low compression-set and high abrasion resistance.
The hardness is 93 Shore A ± 2.
Compound reference: C0
It is also possible to use harder polyurethanes for heavy polluted environments.
In case please contact our technical department.

Assembling

The assembling is extremely easy because of the semi-open groove.
Remove flashes an/or cutting edges in the housing.
For further information please refer to the installation instructions on page 26.

WAT



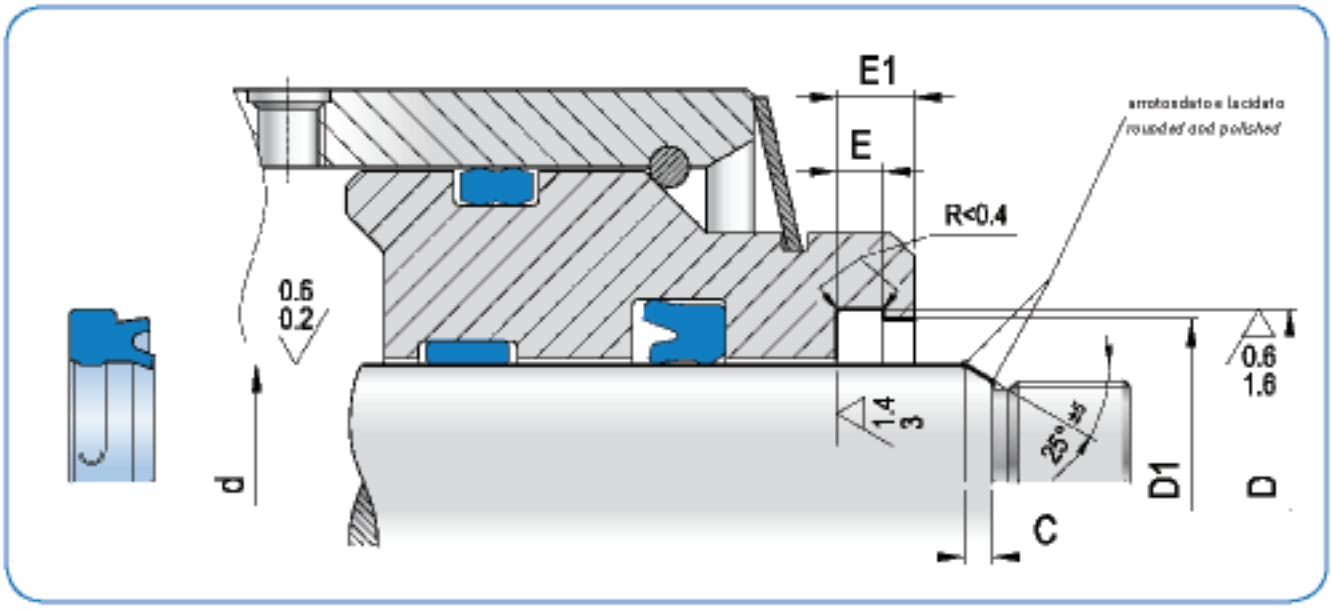

d_{f9}	D_{H10}	D_1 H_{11}	$E_{+0,2}$	$E_{1\ +0,2}$	ART / *ITEM*
16,0	24,0	21,5	5,0	7,0	WAT 0160 0240 050 CO
18,0	26,0	23,5	5,0	7,0	WAT 0180 0260 050 CO
20,0	28,0	25,5	5,0	7,0	WAT 0200 0280 050 CO
22,0	30,0	27,5	5,0	7,0	WAT 0220 0300 050 CO
25,0	33,0	30,5	5,0	7,0	WAT 0250 0330 050 CO
28,0	36,0	33,5	5,0	7,0	WAT 0280 0360 050 CO
32,0	40,0	37,5	5,0	7,0	WAT 0320 0400 050 CO
36,0	44,0	41,5	5,0	7,0	WAT 0360 0440 050 CO
40,0	48,0	45,5	5,0	7,0	WAT 0400 0480 050 CO
45,0	53,0	50,5	5,0	7,0	WAT 0450 0530 050 CO
50,0	58,0	55,5	5,0	7,0	WAT 0500 0580 050 CO
56,0	66,0	63,0	6,3	8,3	WAT 0560 0660 063 CO

d_{f9}	D_{H10}	D_1 H_{11}	$E_{+0,2}$	$E_{1\ +0,2}$	ART / *ITEM*
60,0	68,0	65,5	5,0	7,0	WAT 0600 0680 050 CO
63,0	73,0	70,0	6,3	8,3	WAT 0630 0730 063 CO
70,0	80,0	77,0	6,3	8,3	WAT 0700 0800 063 CO
80,0	90,0	87,0	6,3	8,3	WAT 0800 0900 063 CO
90,0	100,0	97,0	6,3	8,3	WAT 0900 1000 063 CO
100,0	115,0	110,0	9,5	12,0	WAT 1000 1150 095 CO
110,0	122,0	119,0	5,5	7,0	WAT 1100 1220 055 CO
110,0	125,0	120,0	9,5	12,0	WAT 1100 1250 095 CO
115,0	127,0	124,0	5,5	7,0	WAT 1150 1270 055 CO
120,0	132,0	129,0	5,5	7,0	WAT 1200 1320 055 CO
125,0	137,0	134,0	5,5	7,0	WAT 1250 1370 055 CO
125,0	140,0	135,0	9,5	12,0	WAT 1250 1400 095 CO

Nota: altre dimensioni non a catalogo a richiesta. Consultare il nostro ufficio tecnico.

Remark: please contact our technical dept. for further dimensions not included in the catalogue.



TRD

ANELLO RASCHIATORE TIPO TRD

Descrizione

I raschiatori tipo TRD sono composti da un elemento in PTFE+O-Ring che svolge tenuta nella parte statica e contemporaneamente ha un effetto energizzante sul raschiatore in assenza di pressione.
Il TRD oltre ad avere un effetto raschiante della parte esterna del cilindro, ha la funzione di trattenere il film d'olio residuo dal lato interno dello stelo.
Se viene utilizzata con una tenuta adeguata, permette di lavorare con ritorno idrodinamico nel cilindro.

Dati tecnici

Velocità: < 15 m/s
Temperatura: da -30°C a + 100° C per il tipo standard con O-Ring in nitrile.
Con punte fino a 120°C per periodi brevi.
da -15°C a + 150° C per il tipo con o-rings in FKM.

Materiale

Per il tipo standard PTFE caricato a bronzo ed O-Ring in nitrile.
Codice materiale: TN

Montaggio

Il montaggio risulta molto semplice in quanto è effettuato in cava semiaperta.
Inserire L'O-ring nella sede e successivamente l'elemento in PTFE.
Eliminare gli spigoli vivi e le bave nella sede.

TRD TYPE WIPER RING

Description

The TDR wipers are made of a PTFE element and an O-Ring having a sealing effect in the static part and, at the same time has an energizing effect on wiper in the absence of pressure.
The TRD also has a scraping effect on the outside of the Cylinder and maintains a residual oil film on the internal part of the rod.
Used with proper sealing, allows the hydrodynamic return in the cylinder.

Technical data

Speed: < 15 m/s
Temperature: from - 30° C to + 100° C for the standard type with nitrile O-Ring.
Short peaks till +120° C
from -15°C to +150°C with FKM o-rings

Material

Bronze-filled PTFE for the standard type, and nitrile rubber NBR for the O-Ring.
Compound reference: TN

Assembling

Easy assembling in semi-open groove.
The O-Rings have to be fitted first into the groove and Then the PTFE element. Remove flashes and/or cutting edges in the groove.

TRD



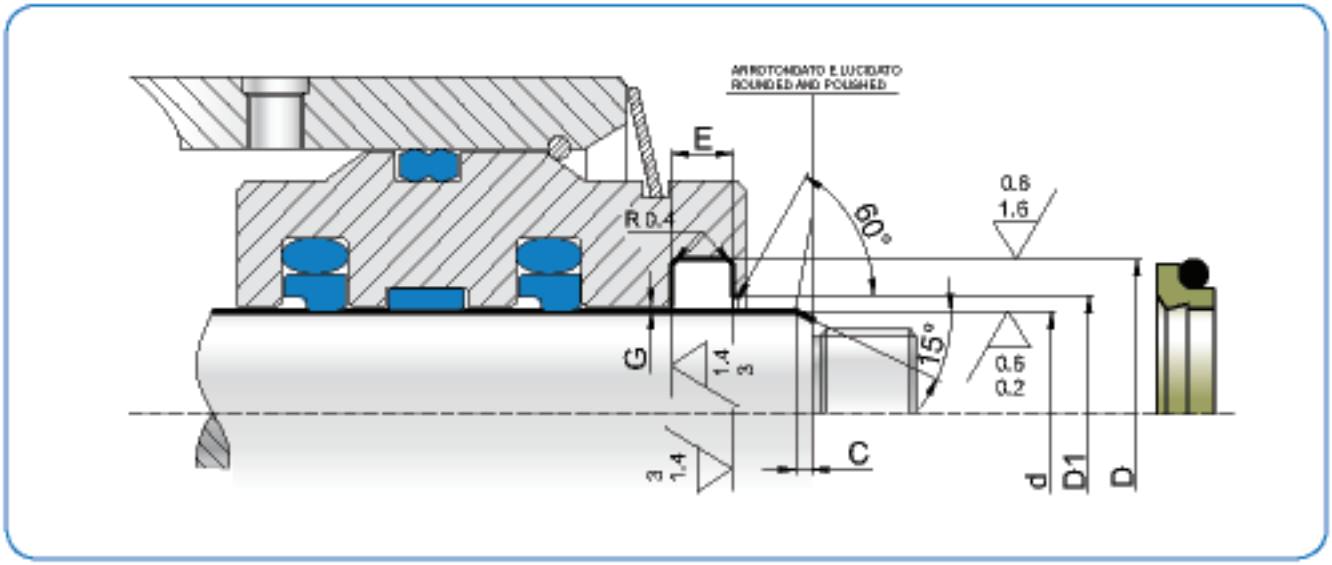

d_{f8}	D_{H9}	$E_{+0,2}$	O-	C	D_3	ART / ITEM
4,0	8,8	3,7	009	5,0	5,5	TRD 0040 0088 037 TN
5,0	9,8	3,7	010	5,0	6,5	TRD 0050 0980 037 TN
7,0	11,8	3,7	011	5,0	8,5	TRD 0070 011 037 TN
8,0	12,8	3,7	012	5,0	9,5	TRD 0080 0128 037 TN
10,0	14,8	3,7	013	5,0	11,5	TRD 0100 0148 037 TN
12,0	18,8	5,0	113	5,0	13,5	TRD 0120 0188 050 TN
14,0	20,8	5,0	114	5,0	15,5	TRD 0140 0208 050 TN
15,0	21,8	5,0	115	5,0	16,5	TRD 0150 0218 050 TN
16,0	22,8	5,0	116	5,0	17,5	TRD 0160 0228 050 TN
18,0	24,8	5,0	117	5,0	19,5	TRD 0180 0248 050 TN
20,0	26,8	5,0	118	5,0	21,5	TRD 0200 0268 050 TN
24,0	30,8	5,0	120	5,0	25,5	TRD 0240 0308 050 TN
25,0	31,8	5,0	121	5,0	26,5	TRD 0250 0318 050 TN
26,0	32,8	5,0	122	5,0	27,5	TRD 0260 0328 050 TN
28,0	34,8	5,0	123	5,0	29,5	TRD 0280 0348 050 TN
30,0	36,8	5,0	124	5,0	31,5	TRD 0300 0368 050 TN
32,0	38,8	5,0	126	5,0	33,5	TRD 0320 0388 050 TN
35,0	41,8	5,0	127	5,0	36,5	TRD 0350 0418 050 TN
37,0	43,8	5,0	129	5,0	38,5	TRD 0370 0438 050 TN
38,0	44,8	5,0	130	5,0	39,5	TRD 0380 0448 050 TN
40,0	46,8	5,0	131	5,0	41,5	TRD 0400 0468 050 TN
42,0	48,8	5,0	132	5,0	43,5	TRD 0420 0488 050 TN
45,0	51,8	5,0	134	5,0	46,5	TRD 0450 0518 050 TN
48,0	54,8	5,0	136	5,0	49,5	TRD 0480 0548 050 TN
50,0	56,8	5,0	137	5,0	51,5	TRD 0500 0568 050 TN
52,0	58,8	5,0	138	5,0	53,5	TRD 0520 0588 050 TN
55,0	61,8	5,0	140	5,0	56,5	TRD 0550 0618 050 TN
58,0	64,8	5,0	142	5,0	59,5	TRD 0580 0648 050 TN
60,0	66,8	5,0	143	5,0	61,5	TRD 0600 0668 050 TN
65,0	73,8	6,0	231	5,0	66,5	TRD 0650 0738 060 TN

d_{f8}	D_{H9}	$E_{+0,2}$	O-	C	D_3	ART / ITEM
70,0	78,8	6,0	233	5,0	71,5	TRD 0700 0788 060 TN
75,0	83,8	6,0	234	5,0	76,5	TRD 0750 0838 060 TN
80,0	88,8	6,0	236	5,0	81,5	TRD 0800 0888 060 TN
85,0	93,8	6,0	237	5,0	86,5	TRD 0850 0938 060 TN
90,0	98,8	6,0	239	5,0	91,5	TRD 0900 0988 060 TN
95,0	103,8	6,0	241	7,0	96,5	TRD 0950 1038 060 TN
100,0	108,8	6,0	242	7,0	101,5	TRD 1000 1088 060 TN
110,0	118,8	6,0	245	7,0	111,5	TRD 1100 1188 060 TN
120,0	128,8	6,0	249	7,0	121,5	TRD 1200 1288 060 TN
125,0	133,8	6,0	250	7,0	125,5	TRD 1250 1338 060 TN
130,0	138,8	6,0	252	7,0	131,5	TRD 1300 1388 060 TN
135,0	143,8	6,0	254	7,0	136,5	WAB 1350 1438 060 TN
140,0	148,8	6,0	255	7,0	141,5	TRD 1400 1488 060 TN
150,0	158,8	6,0	258	7,0	151,5	TRD 1500 1588 060 TN
155,0	163,8	6,0	259	7,0	156,5	TRD 1550 1638 060 TN
160,0	168,8	6,0	260	7,0	161,5	TRD 1600 1688 060 TN
170,0	178,8	6,0	261	7,0	171,5	TRD 1700 1788 060 TN
175,0	183,8	6,0	262	7,0	176,5	TRD 1750 1838 060 TN
180,0	188,8	6,0	263	7,0	181,5	TRD 1800 1888 060 TN
185,0	193,8	6,0	263	7,0	186,5	TRD 1850 1938 060 TN
190,0	198,8	6,0	264	7,0	191,5	TRD 1900 1988 060 TN
195,0	203,8	6,0	265	7,0	196,5	TRD 1950 2038 060 TN
200,0	208,8	6,0	266	10,0	201,5	TRD 2000 2088 060 TN
210,0	218,8	6,0	267	10,0	211,5	TRD 2100 2188 060 TN
220,0	228,8	6,0	269	10,0	221,5	TRD 2200 2288 060 TN
225,0	233,8	6,0	270	10,0	226,5	TRD 2250 2338 060 TN
230,0	238,8	6,0	271	10,0	231,5	TRD 2300 2388 060 TN
240,0	248,8	6,0	272	10,0	241,5	TRD 2400 2488 060 TN
250,0	258,8	6,0	274	10,0	251,5	TRD 2500 2588 060 TN
260,0	272,2	8,4	378	10,0	262,0	TRD 2600 2722 084 TN



WED

RASCHIATORE BIDIREZIONALE TIPO WED

Descrizione

Il raschiatore bidirezionale tipo WED presenta il profilo combinato di un raschiatore e una guarnizione con un labbro raschiante nella parte esterna e un labbro di tenuta nella parte interna.
Ha le dimensioni intercambiabili con le sedi dei raschiatori più utilizzati.
Il labbro che agisce come raschiatore è molto flessibile e si adatta ai disallineamenti dello stelo.
La parte di tenuta presenta un labbro più robusto ed allungato per garantire la tenuta e per aiutare il film d'olio che si crea sullo stelo a rientrare nel cilindro.

Dati tecnici

Pressione:	< 20 bar
Velocità:	1 m/s
Temperatura:	da - 35° C a +100° C con punte fino a +110° C
Fluidi:	acqua a temperatura ambiente e oli a base minerale (vedi tabella 1 a pagina 12)

Materiale

I materiali utilizzati sono dei poliuretani che resistono agli agenti atmosferici con alto modulo elastico e resistenti all'abrasione.
Il materiale standard è di durezza 93 Shore A.
In alternativa è possibile utilizzare poliuretani di durezza superiore quando esistono condizioni gravose in ambienti molto inquinati. In questo caso consultare il nostro ufficio tecnico.
Codice materiale: C0

Montaggio

Il montaggio, molto semplice, è in sede semiaperta.
Eliminare bave e spigoli taglienti nella sede per non danneggiare la tenuta.
Per ulteriori informazioni leggere le istruzioni di montaggio a pag. 26.

WED TYPE DOUBLE ACTING WIPER

Description

The WED bidirectional scraper has a combined scraper profile where the seal is provided with a scraping lip on the outside and a sealing lip on the inside.
The dimensions are interchangeable with normal scraper housings.
The scraping lip is very flexible and it compensate misalignments of the rod. The sealing side has a stronger and longer lip to ensure the sealing performance and to help the oil film remaining on the rod to go back into the cylinder.

Technical data

Pressure:	*< 20 bar*
Speed:	*1 m/s*
Temperature:	*from – 35° C to +100° C with peaks till +110° C*
Fluids:	*water at room temperature and mineral oils (see table 1, page 12)*

Material

The proposed material is a "C0" type polyurethane, with high elasticity modulus, low compression-set and high abrasion resistance.
The hardness is 93 Shore A ± 2.
Compound reference: C0
It is also possible to use harder polyurethanes for heavy polluted environments.
In case please contact our technical department.

Assembling

The assembling is extremely easy because of the semi-open groove.
Remove flashes an/or cutting edges in the housing.
For further information please refer to the installation instructions on page 26.

WED



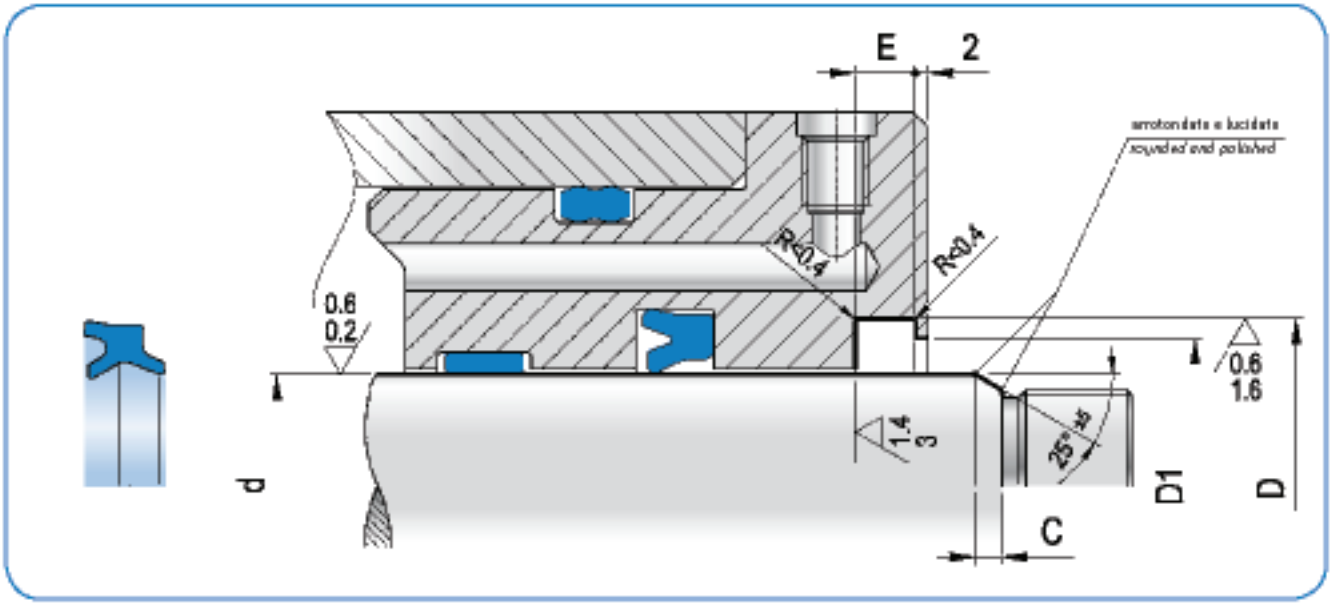

d h9	D H10	E +0,2	D3	C	ART / ITEM
6,0	11,0	3,5	8,5	›3,5	WED 0060 0110 035 CO
8,0	13,0	3,5	10,5	›3,5	WED 0080 0130 035 CO
10,0	16,0	4,0	13,0	›3,5	WED 0100 0160 040 CO
* 12,0	18,0	4,0	14,5	›3,5	WED 0120 0180 040 CO
12,0	18,6	3,8	15,0	›3,5	WED 0120 0186 038 CO
* 14,0	20,0	4,0	16,5	›3,5	WED 0140 0200 040 CO
14,0	20,6	3,8	17,0	›3,5	WED 0140 0206 038 CO
16,0	22,0	4,0	18,5	›3,5	WED 0160 0220 040 CO
* 18,0	24,0	4,0	20,5	›3,5	WED 0180 0240 040 CO
18,0	24,6	3,8	21,0	›3,5	WED 0180 0246 038 CO
20,0	26,0	4,0	22,5	›3,5	WED 0200 0260 040 CO
20,0	28,6	5,3	23,0	›3,5	WED 0200 0286 053 CO
* 22,0	28,0	4,0	24,5	›3,5	WED 0220 0280 040 CO
22,0	30,6	5,3	25,0	›3,5	WED 0220 0306 053 CO
24,0	32,6	5,3	27,0	›3,5	WED 0240 0326 053 CO
25,0	31,0	4,0	27,5	›3,5	WED 0250 0310 040 CO
25,0	33,6	5,3	28,0	›3,5	WED 0250 0336 053 CO
* 28,0	36,0	5,0	31,0	›3,5	WED 0280 0360 050 CO
28,0	36,6	5,3	31,0	›3,5	WED 0280 0366 053 CO
30,0	38,0	5,0	33,0	›3,5	WED 0300 0380 050 CO
30,0	38,6	5,3	33,0	›3,5	WED 0300 0386 053 CO
32,0	40,0	5,0	35,0	›3,5	WED 0320 0400 050 CO
32,0	40,6	5,3	35,0	›3,5	WED 0320 0406 053 CO
35,0	43,0	5,0	38,0	›3,5	WED 0350 0430 050 CO
35,0	43,6	5,3	38,0	›3,5	WED 0350 0436 053 CO
35,0	45,0	5,0	38,0	›4,0	WED 0350 0450 050 CO
* 36,0	44,0	5,0	39,0	›3,5	WED 0360 0440 050 CO

d h9	D H10	E +0,2	D3	C	ART / ITEM
36,0	44,6	5,3	39,0	›3,5	WED 0360 0446 053 CO
38,0	46,0	5,0	41,0	›3,5	WED 0380 0460 050 CO
40,0	48,0	5,0	43,0	›4,0	WED 0400 0480 050 CO
40,0	48,6	5,3	43,0	›4,0	WED 0400 0486 053 CO
42,0	50,0	5,0	45,0	›3,5	WED 0420 0500 050 CO
42,0	50,0	6,0	45,0	›3,5	WED 0420 0500 060 CO
* 45,0	53,0	5,0	48,0	›4,0	WED 0450 0530 050 CO
45,0	53,6	5,3	48,0	›4,0	WED 0450 0536 053 CO
50,0	58,0	5,0	53,0	›4,0	WED 0500 0580 050 CO
50,0	58,6	5,3	53,0	›4,0	WED 0500 0586 053 CO
50,0	60,0	6,0	53,0	›4,0	WED 0500 0600 060 CO
55,0	63,6	5,3	58,0	›4,0	WED 0550 0636 053 CO
55,0	65,0	6,0	58,0	›4,0	WED 0550 0650 060 CO
56,0	64,6	5,3	59,0	›4,0	WED 0560 0646 053 CO
* 56,0	66,0	6,0	59,0	›4,0	WED 0560 0660 060 CO
58,0	68,0	6,0	61,0	›4,0	WED 0580 0680 060 CO
60,0	68,6	5,3	63,0	›4,0	WED 0600 0686 053 CO
60,0	70,0	6,0	63,0	›4,0	WED 0600 0700 060 CO
63,0	71,6	5,3	66,0	›4,0	WED 0630 0716 053 CO
63,0	73,0	6,0	66,0	›4,0	WED 0630 0730 060 CO
65,0	73,6	5,3	68,0	›4,0	WED 0650 0736 053 CO
65,0	75,0	6,0	68,0	›4,0	WED 0650 0750 060 CO
67,0	77,0	6,0	70,0	›4,0	WED 0670 0770 060 CO
70,0	78,6	5,3	73,0	›4,0	WED 0700 0786 053 CO
* 70,0	80,0	6,0	73,0	›4,0	WED 0700 0800 060 CO
75,0	83,6	5,3	78,0	›4,0	WED 0750 0836 053 CO
75,0	85,0	6,0	78,0	›4,0	WED 0750 0850 060 CO

* in conformità alle norme ISO 6195 – *in accordance with ISO 6195 norm*



WED

	d_{h9}	D_{H10}	$E_{+0,2}$	D_1	C	ART / *ITEM*
	78,0	88,0	6,0	81,0	> 4,0	WED 0780 0880 060 C0
	80,0	88,6	5,3	83,0	> 4,0	WED 0800 0886 053 C0
	80,0	90,0	6,0	83,0	> 4,0	WED 0800 0900 060 C0
	85,0	93,6	5,3	88,0	> 3,5	WED 0850 0936 053 C0
	85,0	95,0	6,0	88,0	> 4,0	WED 0850 0950 060 C0
	85,0	97,2	7,1	91,0	> 4,0	WED 0850 0972 071 C0
*	90,0	100,0	6,0	93,0	> 4,0	WED 0900 1000 060 C0
	90,0	102,2	7,1	96,0	> 4,0	WED 0900 1022 071 C0
	100,0	110,0	6,0	103,0	> 5,0	WED 1000 1100 060 C0

	d_{h9}	D_{H10}	$E_{+0,2}$	D_1	C	ART / *ITEM*
	100,0	112,2	7,1	106,0	> 5,0	WED 1000 1122 071 C0
	110,0	122,2	7,1	116,6	> 5,0	WED 1100 1222 071 C0
*	110,0	125,0	8,5	114,0	> 5,0	WED 1100 1250 085 C0
	120,0	135,0	8,5	124,0	> 5,0	WED 1200 1350 085 C0
	125,0	140,0	8,5	129,0	> 5,0	WED 1250 1400 085 C0
*	140,0	155,0	8,5	144,0	> 5,0	WED 1400 1550 085 C0
	150,0	165,0	8,5	154,0	> 5,0	WED 1500 1650 085 C0
	160,0	175,0	8,5	164,0	> 5,0	WED 1600 1750 085 C0
	180,0	195,0	8,5	184,0	> 5,0	WED 1800 1950 085 C0

* in conformità alle norme ISO 6195 – *in accordance with ISO 6195 norm*

Nota: altre dimensioni non a catalogo a richiestaConsultare il nostro ufficio tecnico.
Remark: please contact our technical dept. for fulfer dimensions not included in the catalogue.

WED





WEL

RASCHIATORE PER ESTERNO TIPO WEL

Descrizione

Il raschiatore tipo WEL viene comunemente usato nei cilindri a semplice effetto aperti su di un lato.
Per evitare che la camicia venga deteriorata da agenti atmosferici, condensa o altro nell'ambiente si utilizza un raschiatore con profilo rovesciato che ha funzione di pulitore.

Dati tecnici

Pressione: non esiste pressione ma può avvenire una leggera cavitazione.
Velocità: < 1 m/s
Temperatura: da - 35° C a + 100° C, con punte fino a + 110° C
Fluidi: acqua, polvere o altro nell'atmosfera (vedi tabella 1 a pagina 12)

Materiale

Il materiale utilizzato è un poliuretano tipo C0 ad alto modulo elastico ed a basso compression-set, con una elevata resistenza all'usura a 93 Shore A.
Codice materiale: C0

Montaggio

Il montaggio avviene per accavallamento in sede semiaperta con aggancio che ha la funzione di non permettere l'espulsione del raschiatore durante l'inversione del ciclo. E' importante togliere le bave e gli spigoli per evitarne il danneggiamento.

WEL TYPE EXTERNAL WIPER

Description

The WEL wiper type is commonly used in simple effect cylinders open on one side.
Because of its cleaning function, a reverse profile wiper is used to prevent bore wearing which may be caused by atmospheric agents, condensation and other environmental conditions.

Technical data

Pressure: *no pressure, but a slight cavitation might occur.*
Speed: *< 1 m/s*
Temperature: *from - 35° C to + 100° C, with peaks till + 110° C*
Fluids: *water, dust or other atmospheric factors (see table 1, page 12)*

Material

The proposed material is a "C0" type polyurethane, with high elasticity modulus, low compression-set and high abrasion resistance.
The hardness is 93 Shore A ± 2.
Compound reference: C0

Assembling

The assembling is done by overlapping in semi-open groove with a chamfer preventing the wiper extrusion during the cycle inversion. It is important to remove flashes or cutting edges to avoid damages.



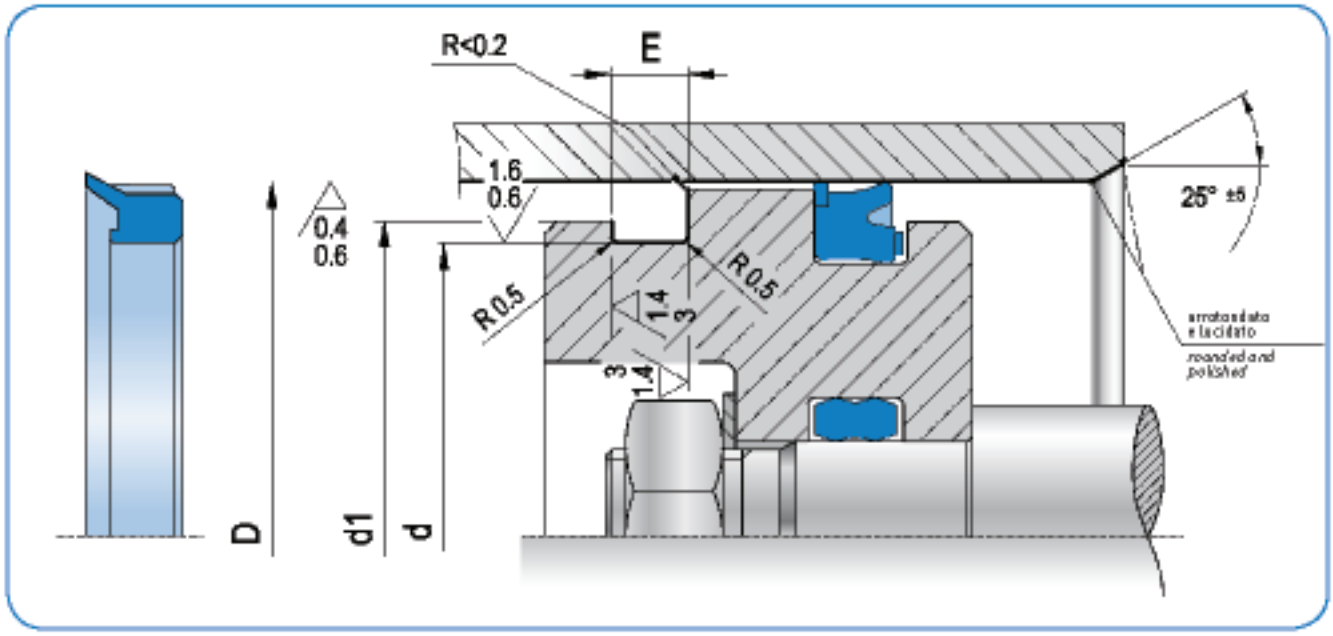

D_{H9}	d_{h9}	$E_{+0,2}$	d_3	ART / *ITEM*
40,0	31,4	5,3	37,0	WEL 0400 0314 053 C0
45,0	36,4	5,3	42,0	WEL 0450 0364 053 C0
50,0	41,4	5,3	47,0	WEL 0500 0414 053 C0
60,0	51,4	5,3	57,0	WEL 0600 0514 053 C0
63,0	54,4	5,3	60,0	WEL 0630 0544 053 C0
70,0	61,4	5,3	67,0	WEL 0700 0614 053 C0
75,0	66,4	5,3	72,0	WEL 0750 0664 053 C0
80,0	71,4	5,3	77,0	WEL 0800 0714 053 C0
90,0	81,4	5,3	87,0	WEL 0900 0814 053 C0

D_{H9}	d_{h9}	$E_{+0,2}$	d_3	ART / *ITEM*
95,0	86,4	5,3	92,0	WEL 0950 0864 053 C0
100,0	91,4	5,3	97,0	WEL 1000 0914 053 C0
110,0	101,4	5,3	107,0	WEL 1100 1014 053 C0
120,0	111,4	5,3	117,0	WEL 1200 1114 053 C0
140,0	131,4	5,3	137,0	WEL 1400 1314 053 C0

Nota: altre dimensioni non a catalogo a richiesta. Consultare il nostro ufficio tecnico.

Remark: please contact our technical dept. for further dimensions not included in the catalogue.



Tenute statiche
Static seals

A completare il sistema di tenuta di un cilindro oleodinamico, oltre alle già descritte guarnizioni dinamiche per stelo e pistone, intervengono quelle che servono ad assicurare la tenuta tra organi reciprocamente fissi.
Le guarnizioni statiche neutralizzano le fughe di fluido attraverso la filettatura esterna della testata e quella necessaria ad avvitare lo stelo al pistone.

Esse sono normalmente realizzate con un o-ring in NBR spesso accoppiato con uno o due anelli antiestrusione necessari in presenza di pressioni elevate e giochi di accoppiamento eccessivi.
A parte le limitazioni poste dalle alte temperature o dalla compatibilità con il fluido sussiste spesso anche un problema di usura. In presenza di pressioni pulsanti che comprimono e rilasciano l'o-ring, si genera comunque un effetto che in presenza di superfici di contatto con rugosità non accurata, tende a "limare" l'elemento di tenuta, provocando perdite.
Sotto questo aspetto risulta estremamente vantaggioso l'impiego di una guarnizione tipo SSA in poliuretano che, oltre a risolvere il problema, presenta il vantaggio di utilizzare un solo elemento anzichè due (o-ring e antiestrusione) con maggiore facilità di montaggio.

In addition to the already described rod and piston dynamic seals, further components granting the sealing between reciprocating static elements are involved in the hydraulic cylinder sealing system.
Leakages in the static seal are prevented by the head external screw-thread and the thread for tightening the rod to the piston.
The seals are usually composed by a NBR o-ring combined with one or two anti-extrusion rings, necessary in cases of high pressure and excessive coupling clearance.
Besides the limitations resulting from high temperatures or fluid compatibility issues, wear is also a common problem. Pulsating pressures loading or unloading the o-ring, when the roughness of the contact surface does not comply with the specification range, cause "filing" of the sealingpart originating a leakage.
The use of a SSA polyurethane seal is more appropriate facing this effect, having also the advantage to have a easier assembling because of one single element instead of two (o-ring and anti-extrusion ring).

GUARNIZIONI STATICHE / *STATIC SEALS*

Condizioni massime non simultanee / *Maximum conditions (not combined)*

Profilo *Profile*	Ns Rif. *Our Ref.*	Temperatura *Temperature* C°	Pressione *Pressure* Bar	Velocità *Speed* m/s	Materiale *Material*	TPV / FKM / PTFE Rivest. / NBR	TPS / Resina / PTFE Carbo. / PTFE	Sezione *Section*	Pagina *Page*
	SSA	-35 +100	< 400	-	TPU	●		Statica *Static*	124
	FSA	-35 +100	< 500	-	TPU	●		Statica *Static*	128
	VRA	-35 +100	-	-	TPU	●		Statica *Static*	130

O-RING / *O-RING*

	OR	vedi specifiche mescole o-ring see specifications of o-ring compounds						Statica *Static*	132

ANELLI ANTIESTRUSIONE / *BACK-UP RINGS*

	RAE	-30 +120	-	< 0,8	TPE		●		Statica *Static*	136
	AKN	-30 +100	-	< 0,8	NBR	●			Statica *Static*	136
	AKC	-40 +200	-	< 0,8	PTFE			○	Statica *Static*	136
	AKW	-40 +200	-	< 0,8	PTFE			○	Statica *Static*	136
	AKS	-40 +200	-	< 0,8	PTFE			○	Statica *Static*	136



SSA

GUARNIZIONE STATICA TIPO SSA

Descrizione

La guarnizione tipo SSA è stata studiata e collaudata da molti anni. E' utilizzata per impieghi statici e in qualche applicazione, anche dinamici.
Viene utilizzata principalmente in sostituzione di un o-ring e di un anello antiestrusione.
L'utilizzo di un poliuretano ad alto modulo elastico e a basso compression-set fa si che non si attorcigli durante il montaggio e che non si estruda in esercizio. L'utilizzo di un solo pezzo e il profilo simmetrico rendono più facile all'operatore il montaggio in sede. Inoltre la gestione dello stock di magazzino risulta dimezzata.

Limiti d'impiego

Pressione: < 400 bar a temperatura di 60° C
Temperatura: da - 35° C a + 100° C, con punte fino a + 110° C
Fluidi: olio e grassi minerali, gas non aggressivi
(vedi tabella 1 a pagina 12)

Materiale

Poliuretano standard a 93 Shore A ± 2.
Codice materiale: C0

Montaggio

E' importante eliminare gli spigoli vivi e le bave nella sede ed eseguire uno smusso di invito per facilitare il montaggio.

SSA TYPE STATIC SEAL

Description

The SSA type static seal has been developed and tested for many years for static and sometimes dynamic sealing applications.
It is mainly used as replacement of o-ring and anti extrusion ring.
The use of a high modulus polyurethane with a low compression-set prevents winding during assembling and avoid extrusion in working conditions.
One single piece with symmetric profile allows the operator easier installation reducing at the same time the stock handling.

Technical data

Pressure: *< 400 bar at a temperature of 60°C*
Temperature: *from - 35° C to + 100° C with peaks till + 110° C*
Fluids: *mineral oil and grease, non aggressive gas*
(see table 1, page 12)

Material

The proposed material is a "C0" type polyurethane, with high elasticity modulus, low compression-set and high abrasion resistance.
The hardness is 93 Shore A ± 2.
Compound reference: C0

Assembling

It is important to remove flashes or cutting edges to avoid damages.
It's also recommended to make a lead-in chamfer for easier assembling.

SSA



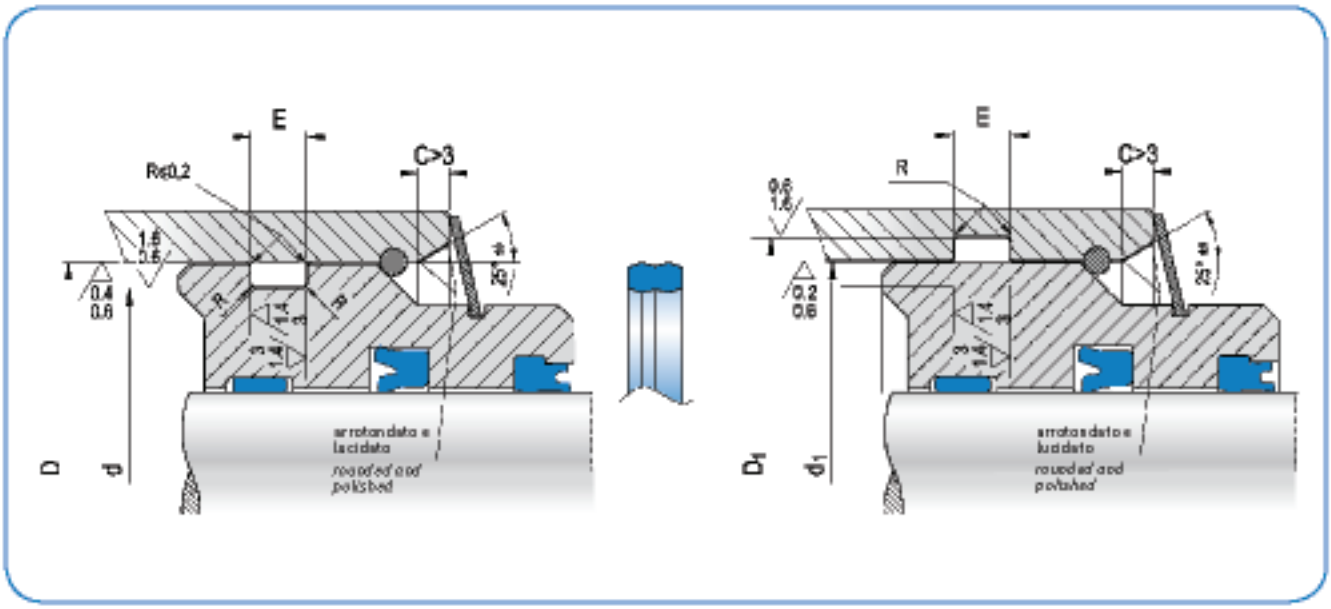

D_{H10}	d_{h9}	$E_{+0,2}$	R	d_{3h9}	D_{3H10}	ART / *ITEM*
10,00	7,40	3,8	0,2	8,0	10,6	SSA 0100 0074 038 C0
12,00	9,40	3,8	0,2			SSA 0120 0094 038 C0
12,65	9,90	2,5	0,2	10,0	12,6	SSA 0126 0099 025 C0
13,00	10,20	2,5	0,2			SSA 0130 0102 025 C0
14,00	11,20	2,5	0,2			SSA 0140 0112 025 C0
14,00	11,40	3,8	0,2	12,0	14,6	SSA 0140 0114 038 C0
14,22	11,47	2,5	0,2			SSA 0142 0114 025 C0
15,00	11,90	2,5	0,2			SSA 0150 0119 025 C0
15,00	11,90	4,0	0,2	11,0	14,1	SSA 0150 0119 040 C0
15,00	12,20	2,5	0,2			SSA 0150 0122 025 C0
15,00	12,40	3,8	0,2	13,0	15,6	SSA 0150 0124 038 C0
15,82	13,07	2,5	0,2			SSA 0158 0130 025 C0
15,87	13,00	3,5	0,2			SSA 0159 0130 035 C0
16,00	12,90	2,5	0,2			SSA 0160 0129 025 C0
16,00	13,40	3,8	0,2	14,0	16,6	SSA 0160 0134 038 C0
16,50	12,00	3,5	0,2			SSA 0165 0120 035 C0
17,00	14,20	2,5	0,2			SSA 0170 0142 025 C0
17,47	14,60	3,5	0,2			SSA 0175 0146 035 C0
18,00	14,90	2,5	0,2			SSA 0180 0149 025 C0
18,00	14,90	4,0	0,2	14,0	17,1	SSA 0180 0149 040 C0
18,00	15,20	2,5	0,2			SSA 0180 0152 025 C0
18,00	15,40	3,8	0,2	16,0	18,6	SSA 0180 0154 038 C0
19,00	15,90	2,5	0,2			SSA 0190 0159 025 C0
19,00	15,90	4,0	0,2	16,0	19,1	SSA 0190 0159 040 C0
19,00	16,20	2,5	0,2			SSA 0190 0162 025 C0
19,05	16,20	3,5	0,2			SSA 0190 0162 035 C0
20,00	17,40	3,4	0,2			SSA 0200 0174 034 C0

D_{H10}	d_{h9}	$E_{+0,2}$	R	d_{3h9}	D_{3Hb0}	ART / *ITEM*
20,00	17,40	3,4	0,2	18,0	20,6	SSA 0200 0174 038 C0
20,62	17,80	3,5	0,2			SSA 0206 0178 035 C0
21,00	17,60	4,4	0,2			SSA 0210 0176 044 C0
22,00	19,40	3,8	0,2	20,0	22,6	SSA 0220 0194 038 C0
24,00	21,40	3,8	0,2	22,0	24,6	SSA 0240 0214 038 C0
25,00	20,50	3,5	0,2			SSA 0250 0205 035 C0
25,00	20,50	5,0	0,2	20,0	24,5	SSA 0250 0205 050 C0
25,00	22,40	3,8	0,2	23,0	25,6	SSA 0250 0224 038 C0
26,00	21,80	3,5	0,2			SSA 0260 0218 035 C0
26,00	22,00	5,0	0,2	22,0	26,0	SSA 0260 0220 050 C0
27,00	22,80	3,5	0,2			SSA 0270 0228 035 C0
28,00	23,00	5,3	0,2			SSA 0280 0230 053 C0
28,00	23,80	3,5	0,2			SSA 0280 0238 035 C0
28,00	24,00	5,0	0,2	24,0	28,0	SSA 0280 0240 050 C0
29,00	24,50	3,5	0,2			SSA 0290 0245 035 C0
29,00	24,90	5,0	0,2	24,0	28,1	SSA 0290 0249 050 C0
30,00	26,00	5,0	0,2	26,0	30,0	SSA 0300 0260 050 C0
32,00	28,00	5,0	0,2	28,0	32,0	SSA 0320 0280 050 C0
34,00	30,00	5,0	0,2	30,0	34,0	SSA 0340 0300 050 C0
35,00	31,00	5,0	0,2	31,0	35,0	SSA 0350 0310 050 C0
36,00	30,40	4,5	0,2			SSA 0360 0304 045 C0
36,00	32,00	5,0	0,2	32,0	36,0	SSA 0360 0320 050 C0
37,00	30,80	4,5	0,2			SSA 0370 0308 045 C0
38,00	31,80	4,5	0,2			SSA 0380 0318 045 C0
38,00	32,40	4,5	0,2			SSA 0380 0324 045 C0
38,60	34,00	4,0	0,2			SSA 0386 0340 040 C0
39,00	33,40	5,3	0,2			SSA 0390 0334 053 C0



SSA

D_{H10}	d_{h9}	$E_{+0,2}$	R	d_{1h9}	D_{1H10}	ART / *ITEM*
40,00	33,80	6,0	0,2			SSA 0400 0338 060 CO
40,00	34,40	4,8	0,2			SSA 0400 0344 048 CO
40,00	36,00	5,0	0,2	36,0	40,0	SSA 0400 0360 050 CO
42,00	36,40	4,8	0,2			SSA 0420 0364 048 CO
42,00	38,00	3,2	0,2			SSA 0420 0380 032 CO
42,00	38,00	5,0	0,2	38,0	42,0	SSA 0420 0380 050 CO
43,00	37,40	5,3	0,2			SSA 0430 0374 053 CO
44,45	38,45	5,3	0,2			SSA 0445 0385 053 CO
45,00	41,00	5,0	0,2	41,0	45,0	SSA 0450 0410 050 CO
45,00	40,00	5,4	0,2			SSA 0450 0400 054 CO
45,60	41,00	4,0	0,2			SSA 0456 0410 040 CO
47,00	42,00	5,4	0,2	42,0		SSA 0470 0420 054 CO
48,00	42,30	5,3	0,2			SSA 0480 0423 053 CO
48,00	42,60	6,2	0,2	43,0	48,4	SSA 0480 0426 062 CO
48,00	43,00	3,6	0,2			SSA 0480 0430 036 CO
50,00	43,80	6,0	0,2			SSA 0500 0438 060 CO
50,00	44,40	5,3	0,2			SSA 0500 0444 053 CO
50,00	44,60	6,2	0,2	45,0	50,4	SSA 0500 0446 062 CO
50,00	47,50	3,6	0,2			SSA 0500 0475 036 CO
52,00	46,60	6,2	0,3	47,0	52,4	SSA 0520 0466 062 CO
53,00	48,00	3,6	0,2			SSA 0530 0480 036 CO
53,00	48,00	5,4	0,3	48,0		SSA 0530 0480 054 CO
54,40	48,70	5,3	0,3			SSA 0544 0487 053 CO
55,00	49,60	6,2	0,3	50,0	55,4	SSA 0550 0496 062 CO
55,00	49,90	5,3	0,3			SSA 0550 0499 053 CO
55,00	51,00	3,5	0,3			SSA 0550 0510 035 CO
57,00	52,20	4,1	0,3			SSA 0570 0522 041 CO
57,15	51,15	5,3	0,3			SSA 0572 0512 053 CO
60,00	53,80	6,0	0,3			SSA 0600 0538 060 CO
60,00	54,30	5,8	0,3			SSA 0600 0543 058 CO
60,00	54,40	5,8	0,3			SSA 0600 0544 058 CO
60,00	54,60	6,2	0,3	55,0	60,4	SSA 0600 0546 062 CO
60,00	55,00	5,3	0,3			SSA 0600 0550 053 CO
60,00	55,90	4,4	0,3			SSA 0600 0559 044 CO
60,70	55,00	5,3	0,3			SSA 0607 0550 053 CO
61,50	56,00	2,8	0,3			SSA 0615 0560 028 CO
63,00	57,40	4,8	0,3			SSA 0630 0574 048 CO
63,50	57,50	5,3	0,3			SSA 0635 0575 053 CO
65,00	59,40	5,0	0,3			SSA 0650 0594 050 CO
65,00	59,60	6,2	0,3	60,0	65,4	SSA 0650 0596 062 CO
65,00	60,00	5,0	0,3			SSA 0650 0600 050 CO
66,00	60,40	5,1	0,3			SSA 0660 0604 051 CO
69,60	65,00	3,9	0,3			SSA 0696 0650 039 CO
70,00	63,80	6,0	0,3			SSA 0700 0638 060 CO
70,00	64,60	6,2	0,3	65,0	70,4	SSA 0700 0646 062 CO

D_{H10}	d_{h9}	$E_{+0,2}$	R	d_{1h9}	D_{1H10}	ART / *ITEM*
70,00	65,00	5,0	0,3			SSA 0700 0650 050 CO
72,00	66,40	5,0	0,3			SSA 0720 0664 050 CO
72,60	68,00	3,8	0,3			SSA 0726 0680 038 CO
74,60	70,00	3,8	0,3			SSA 0746 0700 038 CO
75,00	69,40	5,3	0,3			SSA 0750 0694 053 CO
75,00	69,60	6,2	0,3	70,0	75,4	SSA 0750 0696 062 CO
75,60	70,00	5,3	0,3			SSA 0756 0700 053 CO
76,20	70,20	5,3	0,3			SSA 0762 0702 053 CO
76,60	72,00	4,8	0,3			SSA 0766 0720 048 CO
80,00	73,60	6,4	0,3			SSA 0800 0736 064 CO
80,00	73,80	6,0	0,3			SSA 0800 0738 060 CO
80,00	74,40	5,3	0,3			SSA 0800 0744 053 CO
80,00	74,60	6,2	0,3	75,0	80,4	SSA 0800 0746 062 CO
80,60	76,00	6,4	0,3			SSA 0806 0760 064 CO
84,70	78,58	4,9	0,3			SSA 0847 0786 049 CO
85,00	78,50	6,4	0,3			SSA 0850 0785 064 CO
85,00	79,40	5,3	0,3			SSA 0850 0794 053 CO
85,00	79,60	6,2	0,3	80,0	85,4	SSA 0850 0796 062 CO
85,10	80,50	3,9	0,3			SSA 0851 0805 039 CO
88,00	82,40	7,0	0,3			SSA 0880 0842 070 CO
89,00	82,80	6,0	0,3			SSA 0890 0828 060 CO
90,00	80,60	9,0	0,3			SSA 0900 0806 090 CO
90,00	81,40	9,0	0,3	80,0	88,6	SSA 0900 0814 090 CO
90,00	83,00	6,5	0,3			SSA 0900 0830 065 CO
90,00	84,40	4,8	0,3			SSA 0900 0844 048 CO
92,00	86,50	4,8	0,3			SSA 0920 0865 048 CO
93,00	87,40	5,3	0,3			SSA 0930 0874 053 CO
94,00	89,50	3,8	0,3			SSA 0940 0895 038 CO
95,00	86,40	9,0	0,3	85,0	93,6	SSA 0950 0864 090 CO
99,00	92,80	6,0	0,3			SSA 0990 0928 060 CO
100,00	90,60	9,0	0,4			SSA 1000 0906 090 CO
100,00	91,40	9,0	0,4	90,0	98,6	SSA 1000 0914 090 CO
100,00	94,30	5,3	0,4			SSA 1000 0943 053 CO
102,50	96,60	5,5	0,4			SSA 1025 0966 055 CO
104,00	99,50	3,8	0,4			SSA 1040 0995 038 CO
105,00	96,40	9,0	0,4	95,0	103,6	SSA 1050 0964 090 CO
108,00	98,90	7,2	0,4			SSA 1080 0989 072 CO
110,00	101,40	9,0	0,4	100,0	108,6	SSA 1100 1014 090 CO
110,00	104,50	4,5	0,4			SSA 1100 1045 045 CO
113,00	107,40	5,3	0,4			SSA 1130 1074 053 CO
115,00	106,40	9,0	0,4	105,0	113,6	SSA 1150 1064 090 CO
115,00	108,00	4,6	0,4			SSA 1150 1080 046 CO
120,00	111,40	9,0	0,4	110,0	118,6	SSA 1200 1114 090 CO
125,00	116,40	9,0	0,4	115,0	123,6	SSA 1250 1164 090 CO
130,00	121,40	9,0	0,4	120,0	128,6	SSA 1300 1214 090 CO

SSA



D_{H10}	d_{h9}	$E_{+0,2}$	R	d_{3h9}	D_{3H10}	ART / *ITEM*
135,00	126,40	9,0	0,4	125,0	133,6	SSA 1350 1264 090 00
140,00	131,40	9,0	0,4	130,0	138,6	SSA 1400 1314 090 00
150,00	138,40	12,4	0,4	140,0	151,6	SSA 1500 1384 124 00
160,00	148,40	12,4	0,4	150,0	161,6	SSA 1600 1484 124 00
170,00	158,40	12,4	0,4	160,0	171,6	SSA 1700 1584 124 00
180,00	168,40	12,4	0,4	170,0	181,6	SSA 1800 1684 124 00
190,00	178,40	12,4	0,4	180,0	191,6	SSA 1900 1784 124 00
200,00	188,40	12,4	0,4	190,0	201,6	SSA 2000 1884 124 00
225,00	213,40	12,4	0,4	215,0	226,6	SSA 2250 2134 124 00
250,00	238,40	12,4	0,4	240,0	251,6	SSA 2500 2384 124 00
270,00	258,40	12,4	0,4	260,0	271,6	SSA 2700 2584 124 00
280,00	268,40	12,4	0,4	270,0	281,6	SSA 2800 2684 124 00

Nota: altre dimensioni non a catalogo a richiesta. Consultare il nostro ufficio tecnico.

Remark: please contact our technical dept. for further dimensions not included in the catalogue.



FSA

TENUTA PER FLANGE SAE TIPO FSA

Descrizione

La guarnizione tipo FSA (Flange SAE) ha avuto in questi anni un notevole sviluppo in tutte quelle applicazioni statiche dove un normale o-ring in NBR non resiste a pressione e al gioco di accoppiamento elevati.
Lo speciale profilo, l'alto modulo elastico ed un ottimo compression-set eliminano il problema dell'estrusione e delle perdite nella flangiatura dei tubi.

Limiti d'impiego

Pressione: < 400 bar
Temperatura: da - 35° C a + 100° C, con punte fino a + 110° C
Fluidi: olio e grassi minerali, gas non aggressivi
(vedi tabella 1 a pagina 12)

Materiale

Poliuretano standard a 93 Shore A ± 2.
Codice materiale: C0

Vantaggi

Ottima resistenza all'abrasione e all'estrusione.

Montaggio

E' importante eliminare gli spigoli vivi e le bave nella sede ed eseguire uno smusso di invito per facilitare il montaggio.
Il montaggio in cava aperta risulta molto semplice.

FSA TYPE SAE FLANGE SEAL

Description

The FSA seal type (SAE Flange) has recently known a significant development in all static applications where a normal NBR O-ring would not resist to pressure and high coupling clearance.
The specific profile and the high modulus of elasticity, together with an excellent compression-set, avoid extrusion and leakage problems in the tube flanging.

Technical data

Pressure: *< 400 bar*
Temperature: *from - 35° C to + 100° C with peaks till + 110° C*
Fluids: *oil and mineral grease, non-aggressive gases*
(see table 1, page 12)

Material

The proposed material is a "C0" type polyurethane, with high elasticity modulus, low compression-set and high abrasion resistance.
The hardness is 93 Shore A ± 2.
Compound reference: C0

Advantages

Excellent abrasion and extrusion resistance.

Assembling

It is important to remove flashes or cutting edges in the housing to avoid damages.
It's also recommended to make a lead-in chamfer for easier assembling.
The installation in open housing is extremely simple.



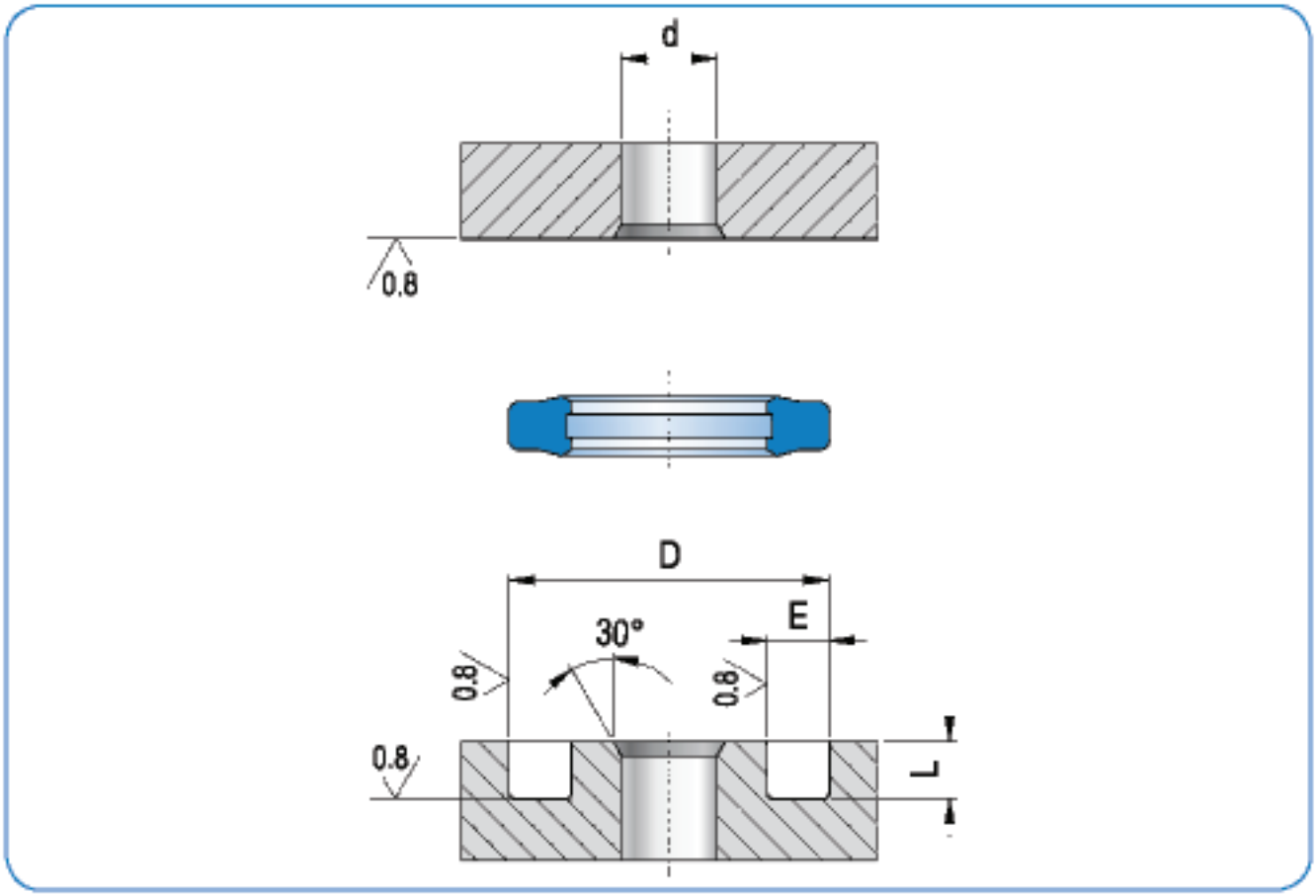

INCH DIM.	d	D	E	L	ART / *ITEM*
			min – max		
1/2"	13,0	25,40 - 25,83	3,94 - 4,45	2,79 - 2,92	FSA 0500 C0
3/4"	19,0	31,75 - 31,88	3,94 - 4,45	2,79 - 2,92	FSA 0750 C0
1"	25,0	39,62 - 39,75	3,94 - 4,45	2,79 - 2,92	FSA 1000 C0
1" 1/4"	32,0	44,45 - 44,58	3,94 - 4,45	2,79 - 2,92	FSA 1250 C0
1" 1/2"	38,0	53,72 - 53,98	3,94 - 4,45	2,79 - 2,92	FSA 1500 C0
2"	51,0	63,25 - 63,50	3,94 - 4,45	2,79 - 2,92	FSA 2000 C0
2" 1/2"	63,0	76,45 - 76,70	3,94 - 4,45	2,79 - 2,92	FSA 2500 C0

Nota: altre dimensioni non a catalogo a richiesta. Consultare il nostro ufficio tecnico.

Remark: please contact our technical dept. for further dimensions not included in the catalogue.



VRA

GUARNIZIONE A V TIPO VRA

Descrizione

La guarnizione tipo VRA è stata studiata per proteggere snodi, cuscinetti, bronzine, flange e tutte quelle parti meccaniche che lavorano in moto rotatorio o semi rotatorio.
Questo tipo di profilo realizzato in materiale B0 a bassa deformazione permanente, impedisce ad acqua, fanghi e altre impurità di penetrare all'interno del componente.
La vasta gamma di diametri facilita il costruttore nella scelta dimensionale.

Limiti d'impiego

Pressione: non essendo una guarnizione di tipo tradizionale, la pressione di esercizio è quella necessaria al mantenimento del grasso all'interno del sistema.
Temperatura: da - 35° C a + 90° C
Fluidi: olio e grassi minerali, gas non aggressivi
(vedi tabella 1 a pagina 12)

Materiale

Poliuretano standard a 90 Shore A.
Codice materiale: B0

Montaggio

E' sufficiente ingrassare le parti metalliche dovevа alloggiata la guarnizione con grasso minerale.
Spigoli e bave che danneggerebbero la tenuta vanno eliminati.

VRA TYPE V-SEAL

Description

The VRA seal type has been conceived to protect joints, bearings, bronze bushes, flanges and all the mechanical parts in rotation or semi-rotation.
Made of B0 material, having a low permanent deformation, it prevents water mud and other impurities penetration.
The wide range of diameters helps the Manufacturer selection.

Technical data

Pressure: it is not a traditional seal, the working pressure is therefore the one resulting from keeping the grease within the system.
Temperature: from - 35° C to + 90° C
Fluid: mineral oil and grease, non-aggressive gas
(see table 1, page 12)

Material

Standard polyurethane at 90 Shore A.
Compound reference: B0

Assembling

We recommend to lubricate the metal parts where the seal will be installed with mineral grease.
It is important to remove flashes or cutting edges otherwise they will reduce the sealing performance.

VRA



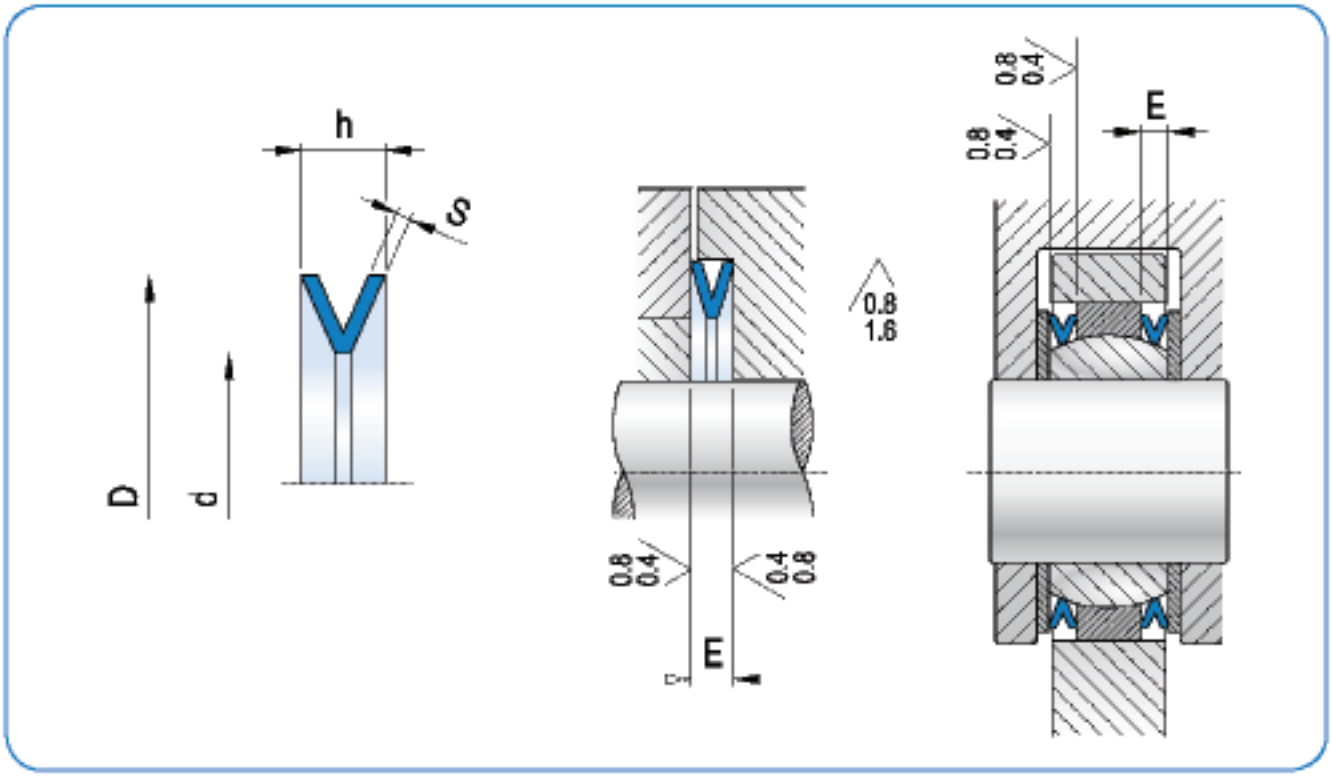

D	d	h	$E_{+0,2}$	S	ART / *ITEM*
27,5	22,5	4,0	2,0	0,75	VRA 0275 0225 040 B0
38,5	31,0	4,5	2,0	0,75	VRA 0385 0310 045 B0
43,0	36,0	5,0	2,0	0,75	VRA 0430 0360 050 B0
51,0	42,0	6,0	2,5	0,80	VRA 0510 0420 060 B0
57,5	47,5	7,0	3,0	1,00	VRA 0575 0475 070 B0
59,0	50,5	5,0	2,5	1,00	VRA 0590 0505 050 B0
64,0	54,0	7,0	3,5	1,00	VRA 0640 0540 070 B0
71,0	59,0	7,0	3,5	1,00	VRA 0710 0590 070 B0
73,0	59,0	7,0	3,5	1,30	VRA 0730 0590 070 B0
80,0	65,0	7,0	3,5	1,00	VRA 0800 0650 070 B0
86,0	70,0	9,0	4,0	1,00	VRA 0860 0700 090 B0
86,0	71,0	9,0	4,0	1,00	VRA 0860 0710 090 B0

D	d	h	$E_{+0,2}$	S	ART / *ITEM*
88,8	70,0	8,0	3,5	1,20	VRA 0888 0700 080 B0
95,0	85,0	6,0	2,5	1,00	VRA 0950 0850 060 B0
100,0	82,0	9,0	4,5	1,25	VRA 1000 0820 090 B0
105,0	90,0	9,0	4,5	1,25	VRA 1050 0900 090 B0
112,0	96,0	10,0	5,0	1,50	VRA 1120 0960 100 B0
121,0	103,0	12,0	5,0	1,50	VRA 1210 1030 120 B0
142,0	116,0	16,5	7,5	1,50	VRA 1420 1160 165 B0
186,0	160,0	16,0	7,5	2,00	VRA 1860 1600 160 B0

Nota: altre dimensioni non a catalogo a richiesta. Consultare il nostro ufficio tecnico.

Remark: please contact our technical dept. for further dimensions not included in the catalogue.



O-Rings

Descrizione

L'o-ring, di forma toroidale, può essere utilizzato sia per applicazioni statiche che dinamiche. Può essere fornito in varie mescole ed in varie durezze.
La reperibilità di varie tipologie di materiali con differenti durezze, ha notevolmente ampliato il campo delle applicazioni. Anche se la forma toroidale è stata sostituita da altre tecnicamente più efficaci, la facilità di montaggio, la semplicità di esecuzione della sede ed il costo contenuto, hanno fatto dell'o-ring la tenuta più utilizzata.

Dimensioni, tolleranze e qualità delle sedi

La sezione nominale dell'o-ring, il diametro interno e la sede sono indicate nelle tabelle dimensionali.
Le tolleranze di accoppiamento dipendono dalla pressione di esercizio, dalla temperatura del fluido e dalla durezza dell'elastomero.
Il grafico di fig 15. indica orientativamente il gioco radiale in funzione della pressione e della durezza
La qualità della sede deve rientrare entro valori che non permettano all'o-ring di usurarsi nel leggero movimento che può avere durante cambi di pressioni o durante inversioni di ciclo.
Nel disegno di fig. 16 sono elencate le rugosità consigliate delle sedi del pistone e dello stelo.

Description

The o-ring presents a toroidal shape and can be used for both static and dynamic applications and can be supplied in different compounds and hardness.
The availability on the market of various types of compounds and hardness has widened the application range.
Even if the toroidal shape has been replaced in some cases by more engineered shapes, the facility in the assembling, the simple groove construction and the limited cost made the O-ring the most used sealing.

Grooves dimensions, tolerance and quality

The o-ring's nominal section, diameter and groove are shown in the dimension charts. The coupling tolerances depend on the working pressure, on the fluid temperature and on the hardness of elastomer.
In Fig. 15 is shown the approx.radial gap related to pressure and hardness.
The quality of the groove must remain within certain limits to prevent the o-ring wearing, while possible small movements may occur during pressure variation or cycle inversions.
In Fig. 16 the drawing indicates the suggested roughness for piston and rod grooves.

Fig. 15

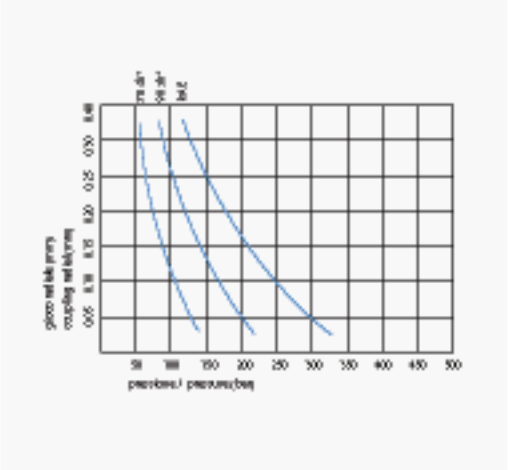

Fig. 16

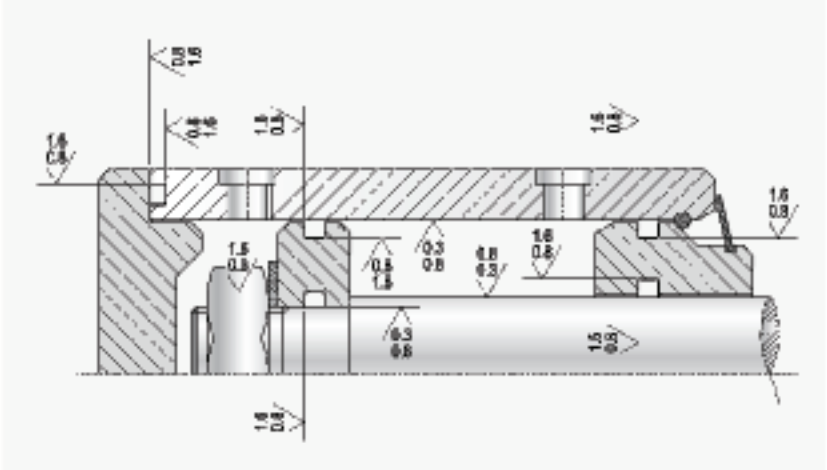

O-Rings



Materiale
Esistono, come indicato nella descrizione, varie mescole e varie durezze per l'o-rings.
Qui di seguito ne elenchiamo alcuni tipi ed il relativo utilizzo:

Mescole in NBR di durezza 70 Shore A standard e 90 Shore A a richiesta:
Mescole di impiego generico sia in oleodinamica che in pneumatica.
Hanno una bassa deformazione permanente e resistono molto bene ai fluidi come olio minerale, olio vegetale, grassi e composti con acqua e glicole con temperatura inferiore a 60° C.
Il range di temperatura in esercizio è compreso tra -25° C e +100° C con punte per periodi brevi fino a 120° C.

Mescole in HNBR di durezza 70 Shore A standard e 75 Shore A a richiesta:
Mescole di base come l'NBR ma con doppio legame del componente butadiene.
E' una mescola idrogenata utilizzata per impieghi a temperatura di 140° C e per periodi brevi anche a 150° C, dove la comune gomma in NBR non resiste.
E' compatibile con grassi, oli minerali e vegetali e si comporta molto bene all'ossidazione.

Mescole in EPDM di durezza 70 Shore A standard e 75 Shore A, a richiesta:
Sono mescole impiegate in presenza di acqua, acqua calda, fluido per freni, fluido antigelo, glicoli ed hanno un range di temperatura compreso tra -40° C e +150° C.

Mescole in FKM di durezza 70 Shore A standard e 90 Shore A a richiesta:
Mescole in elastomero fluorurato utilizzato in applicazioni con elevate temperature e dove si richiede una inerzia chimica straordinaria.
Impiegate a contatto con solventi aromatici, fluidi a base di esteri fosforici, lubrificanti sintetici e acidi concentrati.
Possono essere utilizzate in un range di temperatura compreso tra i -15° C e +200° C.

Mescole in VMQ di durezza di 65/70 Shore A:
Mescole utilizzate nell'industria alimentare e nell'industria medicale. Hanno ottimi risultati in acqua calda, ossigeno ed ozono.
Il range di temperature molto ampio (da -60° C a +220° C) allarga il campo di applicazioni.

Tutte le compatibilità con queste mescole disponibili nella tabella 1 pagina 12.

Material
There are, as indicated before, different compounds and hardness for O-rings.
Some of the materials and applications are listed hereafter.

NBR 70 Shore A standard compound, NBR90 Shore A on demand:
They can be used for hydraulic and pneumatic applications.
They present low compression-set and they have a very good resistance to fluids like mineral oil, vegetal oil, greases and water-glycol compounds at temperatures not to exceeding 60° C.
The operating temperature ranges is from -25° C to +100° C, with short peaks up to 120° C.

HNBR 70 Shore A standard compound and HNBR75 Shore A on demand:
As the NBR they're basic compounds but with a double butadiene bond. It is a hydrogenated material and it can be used in applications where the normal rubber does not perform at temperatures of 140° C even with peaks of 150° C.
It is compatible with greases, mineral and vegetable oils has good behaviour against oxidation.

EPDM 70 Shore A standard compound and EPDM 75 Shore A on demand:
They can be used with water, hot water, fluids for brakes circuits, antifreeze fluid, glycols and the temperature range is from -40° C to +150° C.

FKM 75 Shore A standard compounds and FKM90 Shore A on demand:
Fluorinated elastomer compounds for high temperature applications and where high chemical inertia is requested.
They can be used in the contact with aromatic solvents, ester-phosphoric based fluids, synthetic lubricants and concentrated acids with temperature range from -15° C to +200° C.

VMQ 65/70 Shore A compounds:
They're mainly used in the food and medical industry. They give excellent results in hot water, oxygen and ozone.
The wide temperature range (from -60° C to +220° C) allows the use in several application.

For all the compounds compatibilities see table 1, page 12.



Anelli antiestrusione
Back-up Rings

ANELLI ANTIESTRUSIONE

Descrizione

Come descritto in precedenza, la tenuta con O-Ring è la più semplice ed anche la più economica in condizioni di lavoro non gravose.
Quando si è in presenza di pressioni più elevate il solo O-Ring non è sufficiente. In questo specifico caso bisogna montare O-Ring con uno o due anelli antiestrusione,per il semplice o doppio effetto.
Nella gamma degli anelli antiestrusione abbiamo vár tipi di materiale: il PTFE, l'NBR e il TPE (termoplastico elastomero).

Dati tecnici

Pressione: <400 bar per il tipo RAE
<200 bar per il tipo AKN
<300 per i tipi AKC-AKS-AKW
Velocità: <1 m/s
Temperatura: da - 20°C a 120°C per i tipi RAE ed AKN
-20°C÷+200°C per i tipi AKC,AKS ed AKW
compatibilmente con l'O-Ring montato
Fluidi: fluidi idraulici a base minerale (vedi tabella 1 a pagina 12)

Materiale

I vari tipi di materiali proposti sono:

- TPE (termoplastico elastomero) per il tipo RAE
- NBR 90 Shore A per il tipo AKN
- PTFE per i tipi AKC-AKS-AKW

Montaggio

Il montaggio avviene in cava chiusa con la sequenza anello antiestrusione poi O-Ring.

BACK UP RINGS

Description

As described above, the sealing with O-Ring is the simplest and the most economic solution for not heavy working conditions.
Bur when there are high pressures the O-Ring alone is not enough. In this specific case we must mount O-ring with one or two anti-extrusion rings, for th simple or double effect.
In the range of anti-extrusion rings there're different materials: PTFE, NBR and TPE (thermoplastic elastomer).

Technical data

Pressure: *<400 bar for type RAE*
<200 bar for type AKN
<300 bar for type AKC-AKS-AKW
Speed: *< 1 m/s*
Temperature: *from - 20 °C to +120 °C for type RAE and AKN*
From -20 to +200 for type AKC,AKS and AKW depending of the O-Ring

Fluids: *mineral hydraulic fluids (see table 1, page 12)*

Material

The different proposed materials are:

- *TPE (thermoplastic elastomer) for type RAE*
- *NBR 90 Shore A for type AKN*
- *PTFE for types AKC-AKS-AKW*

Assembling

The assembling is done in closed groove fitting the Anti-extrusion-ring before and the O-Ring after.

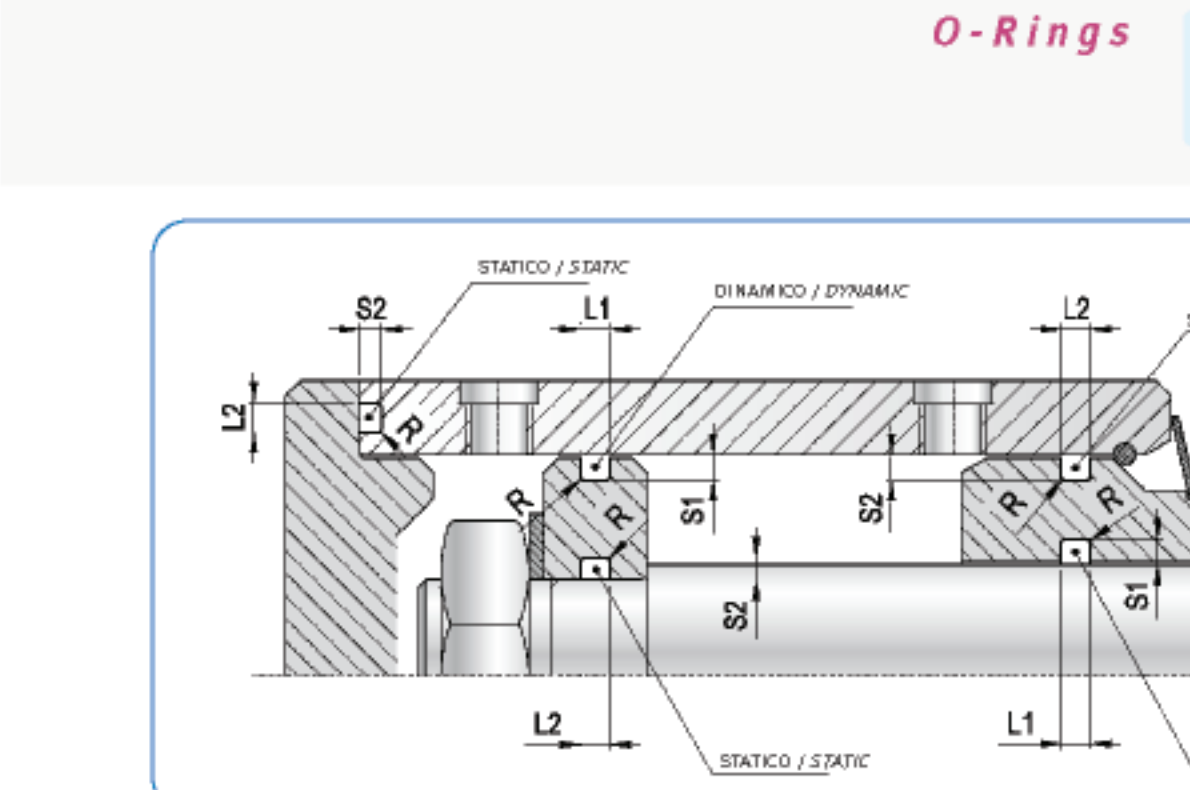

S sezione *section*	S1 sezione dinamica *dynamic section*	L1 sezione dinamica *dynamic section*	S2 sezione statica *static section*	L2 sezione statica *static section*	R raggio *radius*
1,78 ± 0,08	1,45 ± 0,05	2,40 ± 0,20	1,30 ± 0,05	2,60 ± 0,20	0,30 ± 0,10
2,62 ± 0,09	2,25 ± 0,05	3,60 ± 0,20	2,00 ± 0,05	3,80 ± 0,20	0,40 ± 0,15
3,53 ± 0,10	3,10 ± 0,05	4,80 ± 0,20	2,70 ± 0,05	5,00 ± 0,20	0,50 ± 0,20
5,34 ± 0,15	4,70 ± 0,05	7,10 ± 0,20	4,30 ± 0,05	7,30 ± 0,20	0,60 ± 0,25
6,99 ± 0,15	6,10 ± 0,05	9,50 ± 0,20	5,80 ± 0,05	9,70 ± 0,20	1,00 ± 030

DIMENSIONI SEDE
GROOVE DIMENSION

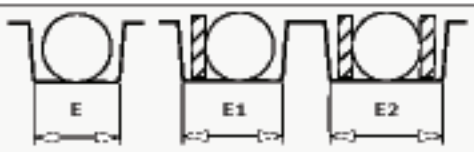

S	h	E	E1	E2
1,78	1,45	2,5	4,0	5,5
2,62	2,25	3,5	5,0	6,5
3,53	3,10	4,5	6,0	7,5
5,34	4,70	7,0	9,0	10,5
6,99	6,10	9,5	12,0	14,5

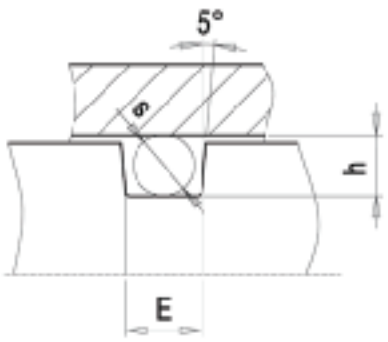

Tipi anelli antiestrusione
Antiextrusion rings types

RAE	AKS	AKC	AKW	AKN
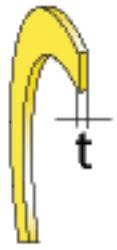	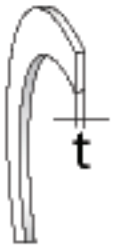	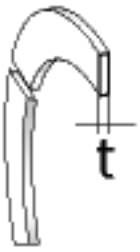	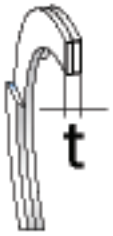	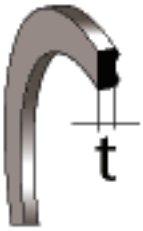
TPE 55 shore D	PTFE	PTFE	PTFE	NBR 90 Shore A

Sez Corda O-Ring O-Ring CS	t				
	RAE	AKS	AKC	AKW	AKN
1,78	1,4	1,23	1,27	1,5	1,14
2,62	1,4	1,23	1,27	1,5	1,14
3,53	1,4	1,23	1,27	1,5	1,02
5,34	1,7	1,78	1,85	2,0	1,52
6,99	2,5	2,67	2,74	2,5	2,44

Esempio richiesta d'ordine
Per un o-ring 150:

Example for order request
For one o-ring 150:

Rif. anello antiestrusione		***rif. O-Ring***		
tipo ***type***	**materiale** ***material***	**diametro** ***diameter***	**rif. AS-BS** ***AS-BS ref.***	**rif. ITA** ***ITA ref.***
RAE	TPE 55 Shore D	72,96 ± 0,64	150	3287
AKS	PTFE	72,96 ± 0,64	150	3287
AKC	PTFE	72,96 ± 0,64	150	3287
AKW	PTFE	72,96 ± 0,64	150	3287
AKN	NBR 90 Shore A	72,96 ± 0,64	150	3287

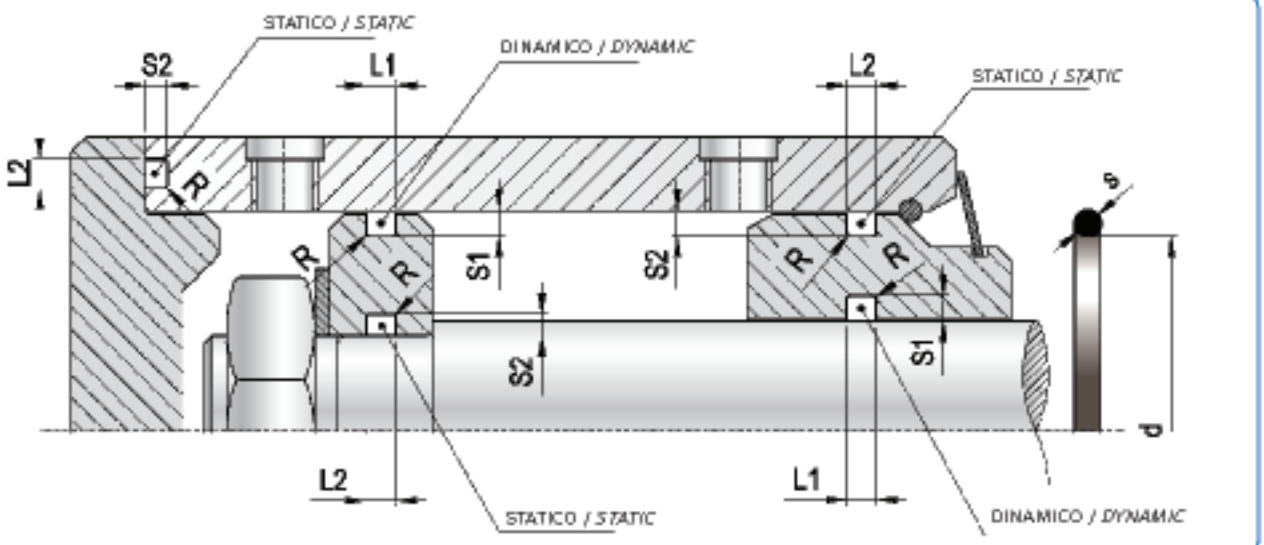

S	S1	L1	S2	L2	R
1,78 ± 0,08	1,45 ± 0,05	2,40 ± 0,20	1,30 ± 0,05	2,60 ± 0,20	0,30 ± 0,10

d	toll ±	AS-BS o-ring	ITA altro rif. *alternative*
1,78	0,13	004	2007
2,57	0,14	005	2010
2,90	0,14	006	2012
3,68	0,14	007	2015
4,47	0,14	008	2018
5,28	0,15	009	20,19
6,07	0,15	010	2025
6,75	0,16	610	106
7,65	0,16	011	2031
8,73	0,17	611	108
9,25	0,17	012	2037
10,82	0,18	013	2043
11,11	0,18	806	114
12,42	0,19	014	2050
14,00	0,20	015	2056
15,60	0,20	016	2062
17,17	0,21	017	2068
18,77	0,22	018	2075
20,35	0,23	019	2081
21,95	0,24	020	2087
23,52	0,24	021	2093
25,12	0,26	022	2100
26,07	0,28	023	2106
28,30	0,29	024	2112

d	toll ±	AS-BS o-ring	ITA altro rif. *alternative*
29,87	0,29	025	2118
31,47	0,31	026	2125
33,05	0,32	027	2131
34,65	0,33	028	2137
37,82	0,37	029	2150
41,00	0,39	030	2162
44,17	0,42	031	2175
47,35	0,44	032	2187
50,52	0,47	033	2200
53,70	0,50	034	2212
56,87	0,52	035	2225
60,05	0,55	036	2237
63,22	0,58	037	2250
66,40	0,59	038	2262
69,57	0,63	039	2275
72,75	0,64	040	2287
75,92	0,67	041	2300
82,27	0,71	042	2325
88,62	0,77	043	2350
94,97	0,81	044	2375
101,32	0,87	045	2400
107,67	0,91	046	2425
114,02	0,95	047	2450
120,37	1,00	048	2475



O-Rings

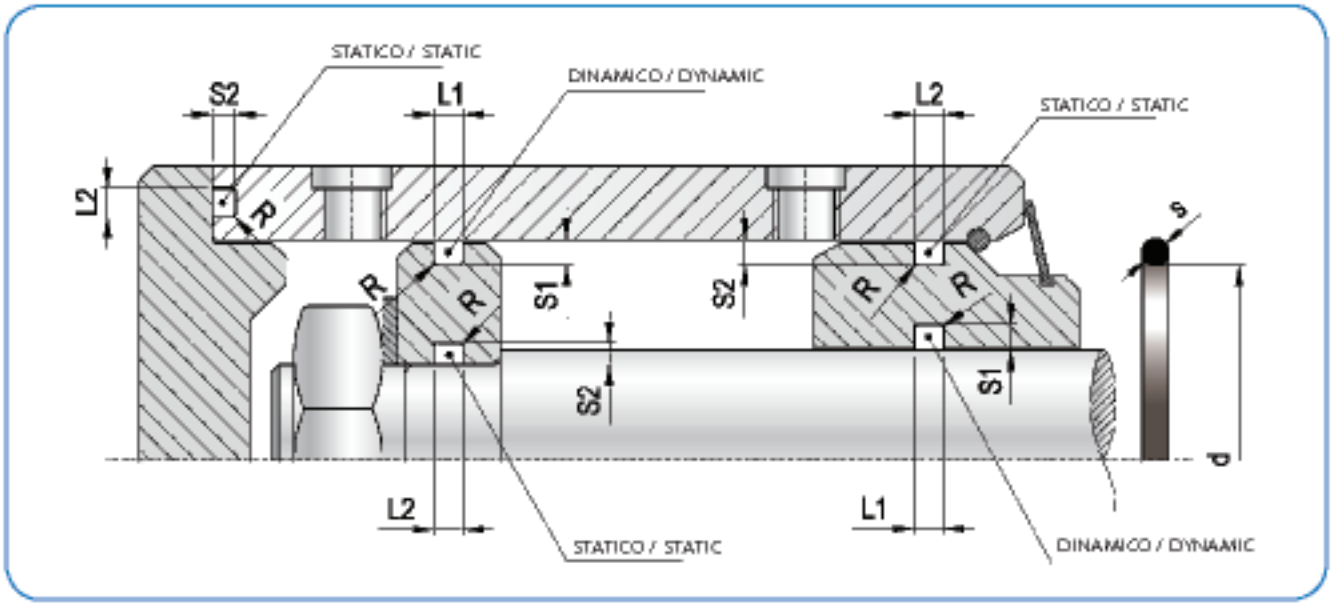

S	S1	L1	S2	L2	R
2,62 ±0,09	2,25 ±0,05	3,60 ±0,2	2,00 ±0,05	3,80 ±0,2	0,4 ±0,15

d	toll ±	AS-BS o-ring	ITA altro rif. *alternative ref.*
9,13	0,17	109	-
9,19	0,17	110	3037
9,92	0,17	613	112
10,77	0,18	111	3043
11,91	0,19	614	115
12,37	0,19	112	3050
13,10	0,19	615	117
13,94	0,19	113	3056
15,08	0,20	616	119
15,54	0,20	114	3062
15,88	0,20	809	121
17,21	0,21	115	3068
17,86	0,21	617	123
18,72	0,22	116	3075
20,29	0,23	117	3081
20,63	0,23	812	128
21,89	0,23	118	3087
22,22	0,24	813	130
23,47	0,24	119	3093
23,81	0,25	814	132
25,07	0,26	120	3100

d	toll ±	AS-BS o-ring	ITA altro rif. *alternative ref.*
26,64	0,28	121	3106
28,24	0,29	122	3112
29,82	0,29	123	3118
31,42	0,31	124	3123
32,99	0,32	125	3131
34,60	0,33	126	3137
36,14	0,35	127	3143
37,77	0,37	128	3150
39,34	0,38	129	3156
40,95	0,39	130	3162
42,52	0,40	131	3168
44,12	0,42	132	3175
45,69	0,43	133	3181
47,30	0,44	134	3187
48,90	0,46	135	3193
50,47	0,47	136	3200
52,07	0,48	137	3206
53,65	0,50	138	3212
55,25	0,51	139	3218
56,82	0,52	140	3225
58,42	0,54	141	3231



O-Rings

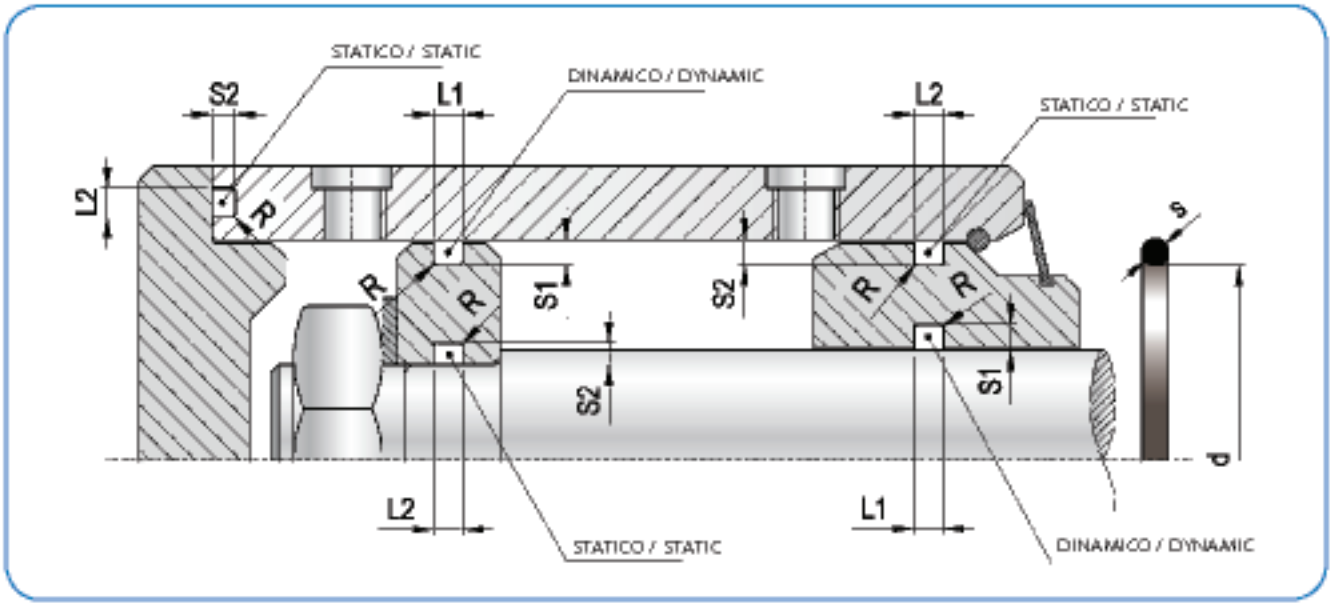

S	S1	L1	S2	L2	R
3,53 ± 0,1	3,10 ± 0,05	4,80 ± 0,2	2,70 ± 0,05	5,00 ± 0,2	0,5 ± 0,2

d	toll ±	AS-BS o-ring	ITA altro rif. *alternative ref.*
18,64	0,22	210	4075
20,22	0,23	211	4081
21,82	0,24	212	4087
23,40	0,24	213	4093
24,99	0,25	214	4100
25,80	0,26	618	134
26,58	0,28	215	4106
28,17	0,29	216	4112
29,75	0,29	217	4118
31,34	0,31	218	4125
32,92	0,32	219	4131
34,52	0,34	220	4137
36,09	0,35	221	4143
37,69	0,37	222	4150
39,69	0,38	824	144
40,87	0,39	223	4162
41,28	0,40	825	146
42,86	0,41	826	147
44,04	0,42	224	4175
44,45	0,42	827	149
46,04	0,43	828	150

d	toll ±	AS-BS o-ring	ITA altro rif. *alternative ref.*
47,22	0,44	225	4187
47,63	0,45	829	152
49,21	0,46	830	153
50,39	0,47	226	4200
50,80	0,47	831	155
52,39	0,48	832	156
53,57	0,50	227	4212
53,98	0,50	833	158
55,56	0,51	834	159
56,74	0,52	228	4225
57,15	0,54	835	161
58,74	0,54	836	162
59,92	0,54	229	4237
60,33	0,55	837	164
61,91	0,56	838	165
63,09	0,58	230	4250
63,50	0,58	839	167
65,09	0,59	840	168
66,27	0,59	231	4262
66,68	0,59	841	170
68,26	0,61	842	171



d	toll ±	AS-BS o-ring	ITA altro rif. *alternative ref.*
69,44	0,63	232	4275
69,85	0,63	843	173
71,44	0,64	844	174
72,62	0,64	233	4287
73,03	0,66	845	176
74,61	0,66	846	177
75,79	0,67	234	4300
78,97	0,69	235	4312
82,14	0,71	236	4325
85,32	0,75	237	4337
88,49	0,77	238	4350
91,67	0,79	239	4362
94,84	0,81	240	4375
98,02	0,84	241	4387
101,19	0,87	242	4400
104,37	0,89	243	4412
107,54	0,91	244	4425
110,72	0,93	245	4437
113,89	0,95	246	4450
117,07	0,97	247	4462
120,24	1,00	248	4475
123,42	1,03	249	4487
126,59	1,05	250	4500
129,77	1,08	251	4512
132,94	1,10	252	4525
136,12	1,13	253	4537
139,29	1,13	254	4550

d	toll ±	AS-BS o-ring	ITA altro rif. *alternative ref.*
142,47	1,17	255	4562
145,64	1,20	256	4575
148,82	1,20	257	4587
151,99	1,24	258	4600
158,34	1,27	259	4625
164,69	1,31	260	4650
171,04	1,38	261	4675
177,39	1,41	262	4700
183,74	1,44	263	4725
190,09	1,51	264	4750
196,44	1,55	265	4775
202,79	1,59	266	4800
209,14	1,63	267	4825
215,49	1,67	268	4850
221,84	1,71	269	4875
228,19	1,75	270	4900
234,54	1,79	271	4925
240,89	1,83	272	4950
247,24	1,88	273	4975
253,59	1,93	274	41000
266,29	2,02	275	41050
278,99	2,08	276	41100
291,69	2,21	277	41150
304,39	2,25	278	41200
329,79	2,43	279	41300
355,19	2,62	280	41400
380,59	2,76	281	41500



O-Rings

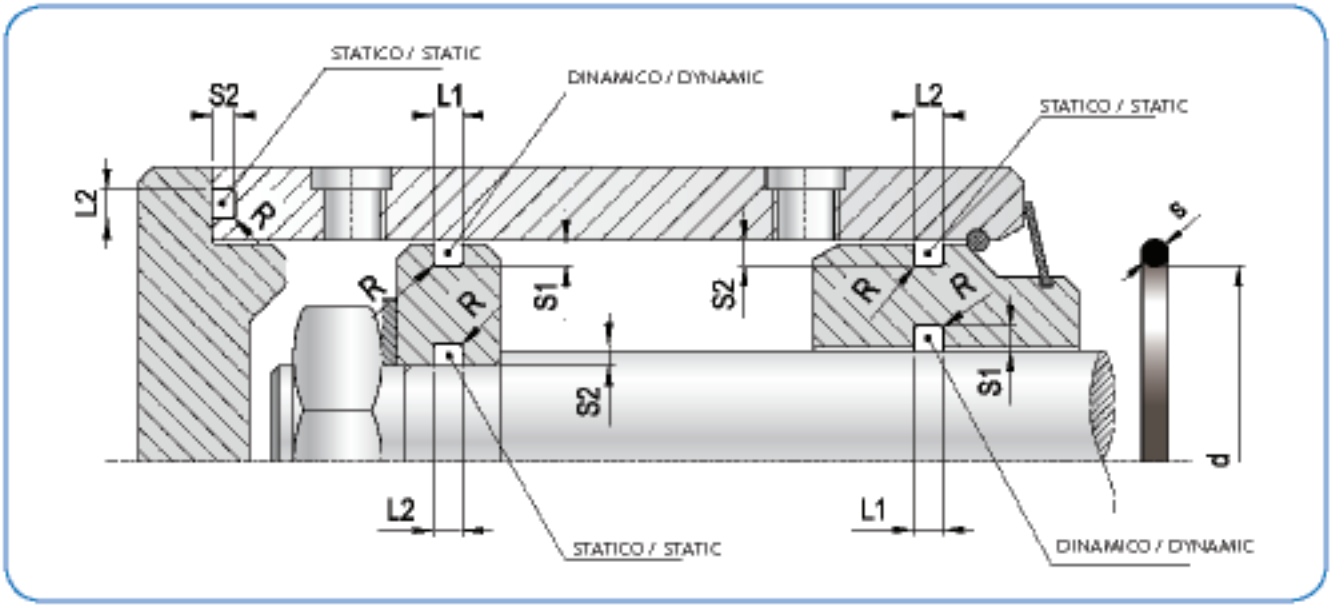

S	S1	L1	S2	L2	R
5,34 ± 0,13	4,70 ± 0,05	7,10 ± 0,2	4,30 ± 0,05	7,30 ± 0,2	0,6 ± 0,25

d	toll ±	AS-BS o-ring	ITA altro rif. *alternative ref.*
37,47	0,36	325	6150
40,65	0,39	326	6162
43,82	0,42	327	6175
47,00	0,44	328	6187
50,16	0,47	329	6200
53,34	0,50	330	6212
56,52	0,52	331	6225
59,69	0,54	332	6237
62,87	0,56	333	6250
66,04	0,59	334	6262
69,22	0,63	335	6275
72,39	0,64	336	6287
74,63	0,66	619	178
75,57	0,67	337	6300
78,74	0,69	338	6312
79,77	0,69	620	181
81,92	0,71	339	6325
85,09	0,75	340	6337
88,27	0,77	341	6350
89,69	0,77	621	185
91,44	0,79	342	6362

d	toll ±	AS-BS o-ring	ITA altro rif. *alternative ref.*
94,62	0,81	343	6375
97,79	0,84	344	6387
100,00	0,87	622	189
100,97	0,87	345	6400
104,14	0,89	346	6412
107,32	0,91	347	6425
109,50	0,93	623	193
110,05	0,93	348	6437
113,67	0,95	349	6450
116,84	0,97	350	
117,50	0,97	860	199
120,02	1,00	351	
120,65	1,00	861	201
123,20	1,03	352	
123,80	1,03	862	203
126,37	1,05	353	
127,00	1,05	863	206
129,54	1,08	354	
130,20	1,08	864	208
132,72	1,10	355	
133,40	1,10	865	210



d	toll ±	AS-BS o-ring	ITA altro rif. *alternative ref.*
135,90	1,10	356	
136,50	1,13	866	213
139,07	1,13	357	
139,70	1,13	867	215
142,24	1,17	358	
142,90	1,17	868	217
145,42	1,20	359	
146,10	1,20	869	219
148,60	1,20	360	
149,20	1,20	870	221
151,77	1,24	361	6600
158,12	1,27	362	6625
164,47	1,31	363	6645
170,82	1,38	364	6670
177,17	1,41	365	6700
183,52	1,44	366	6720
189,87	1,48	367	6745
196,22	1,55	368	6670
202,57	1,59	369	6700
208,92	1,63	370	6720
215,27	1,67	371	6745
221,62	1,71	372	6775
227,97	1,75	373	6795
234,32	1,79	374	6820

d	toll ±	AS-BS o-ring	ITA altro rif. *alternative ref.*
240,67	1,83	375	6850
247,02	1,88	376	6870
253,37	1,93	377	6895
266,07	2,02	378	6920
278,77	2,08	379	6945
291,47	2,21	380	6975
304,17	2,25	381	6995
329,57	2,43	382	61050
354,97	2,56	383	61100
380,37	2,76	384	61150
405,26	2,91	385	61200
430,66	3,07	386	61300
456,06	3,22	387	61400
481,40	3,37	388	61500
506,80	3,54	389	61600
532,20	3,72	390	61700
557,60	3,81	391	61800
582,68	4,05	392	61900
608,08	4,13	393	62000
633,48	4,34	394	62100
658,88	4,46	395	



O-Rings

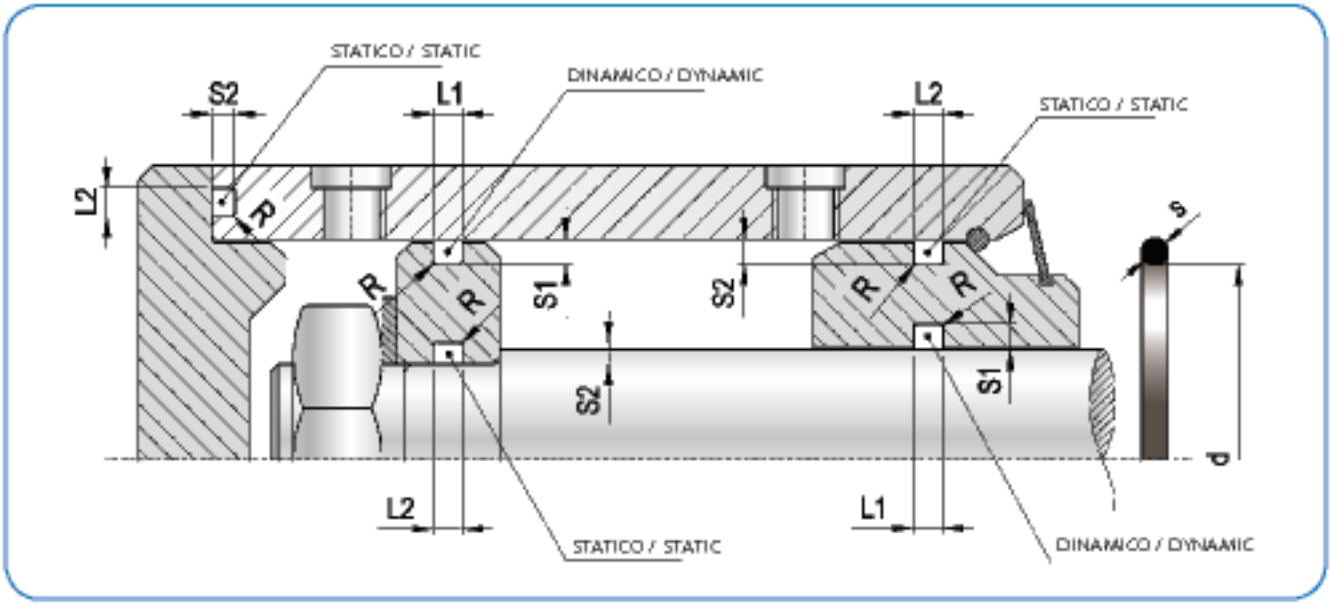

S	S1	L1	S2	L2	R
6,99 ± 0,15	6,1 ± 0,05	9,5 ± 0,2	5,80 ± 0,05	9,7 ± 0,2	1 ± 0,3

d	toll ±	AS-BS o-ring	ITA altro rif. *alternative ref.*
113,67	0,95	425	4437
114,70	0,95	624	197
116,84	0,97	426	8462
120,02	1,00	427	8475
123,20	1,03	428	8487
124,60	1,03	625	204
126,37	1,05	429	8500
129,54	1,08	430	8512
132,72	1,10	431	8525
134,50	1,10	626	211
135,90	1,10	432	8537
139,07	1,13	433	8550
142,24	1,17	434	8562
145,42	1,20	435	8575
148,60	1,20	436	8587
151,77	1,24	437	8600
155,60	1,27	872	223
158,12	1,27	438	8625

d	toll ±	AS-BS o-ring	ITA altro rif. *alternative ref.*
159,50	1,27	627	225
161,90	1,31	874	226
164,47	1,31	439	8650
166,70	1,34	628	228
168,30	1,34	876	229
170,82	1,38	440	8675
174,60	1,38	878	231
177,17	1,41	441	8700
181,00	1,44	880	233
183,52	1,44	442	8725
187,30	1,48	882	235
189,87	1,48	443	8750
193,70	1,51	884	237
196,22	1,55	444	8775
200,00	1,55	886	239
202,57	1,59	445	8800
208,92	1,63	674	8825
215,27	1,67	446	8850



d	toll ±	AS-BS o-ring	ITA altro rif. *alternative ref.*
221,62	1,71	676	8875
227,97	1,75	447	8900
234,32	1,79	678	8925
240,67	1,83	448	8950
247,00	1,88	680	8975
253,30	1,93	449	81000
259,70	1,98	682	81025
266,07	2,02	450	81050
272,40	2,08	684	81075
278,77	2,08	451	81100
285,10	2,14	686	81125
291,47	2,21	452	81150
297,80	2,21	688	81175
304,17	2,25	453	81200
316,87	2,37	454	81250
329,57	2,43	455	81300
342,27	2,49	456	81350
354,97	2,56	457	81400

d	toll ±	AS-BS o-ring	ITA altro rif. *alternative ref.*
367,67	2,68	458	81450
380,37	2,76	459	81500
393,07	2,84	460	81550
405,26	2,91	461	81600
417,96	2,99	462	81650
430,66	3,07	463	81700
443,36	3,15	464	81750
456,06	3,22	465	81800
468,76	3,30	466	81850
481,46	3,37	467	81900
494,16	3,45	468	81950
506,86	3,54	469	82000
532,26	3,72	470	82100
557,66	3,81	471	82200



Schema cilindro pneumatico A

Pneumatic cylinder sketch A

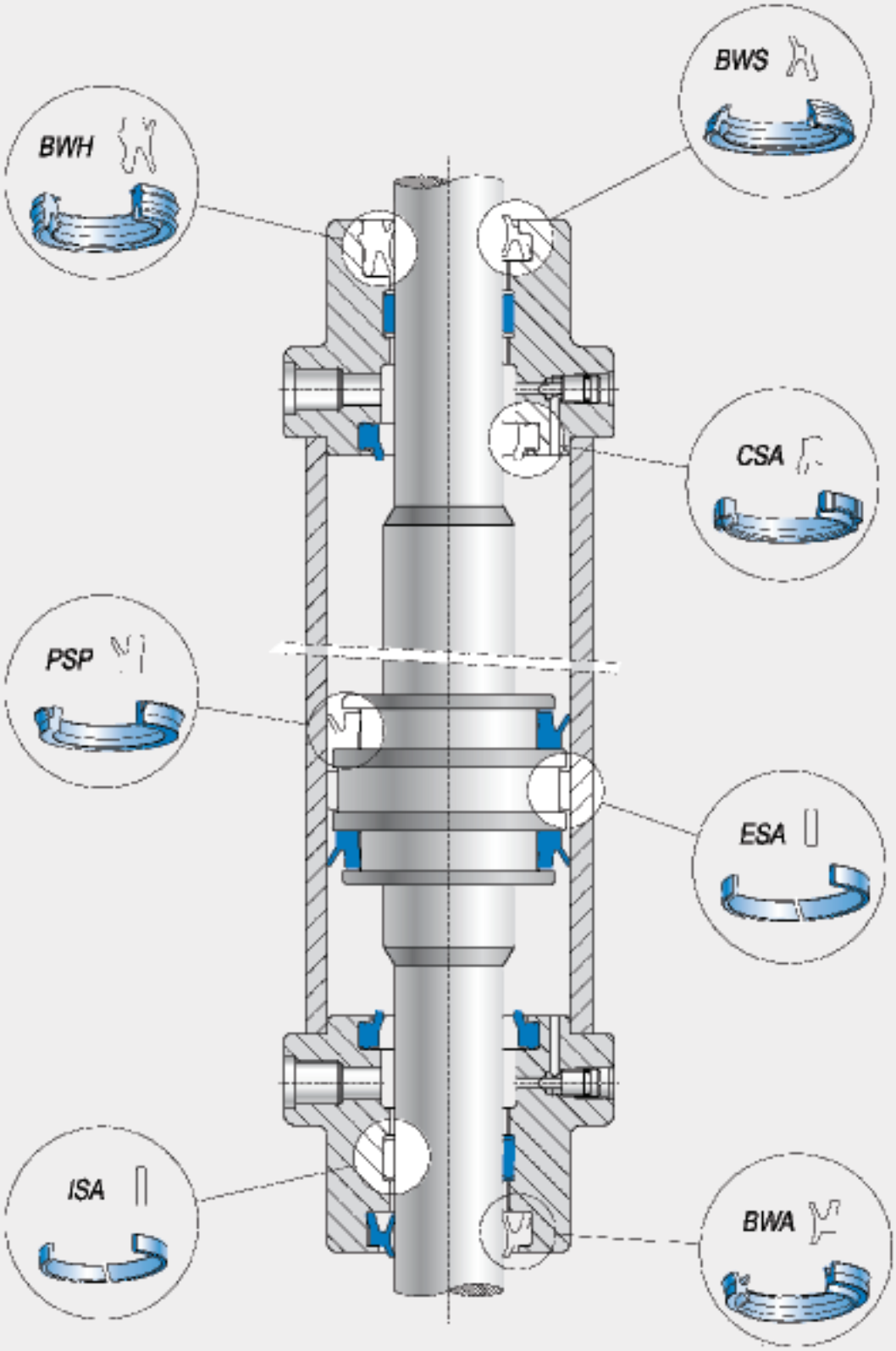

Schema cilindro pneumatico B
Pneumatic cylinder sketch B

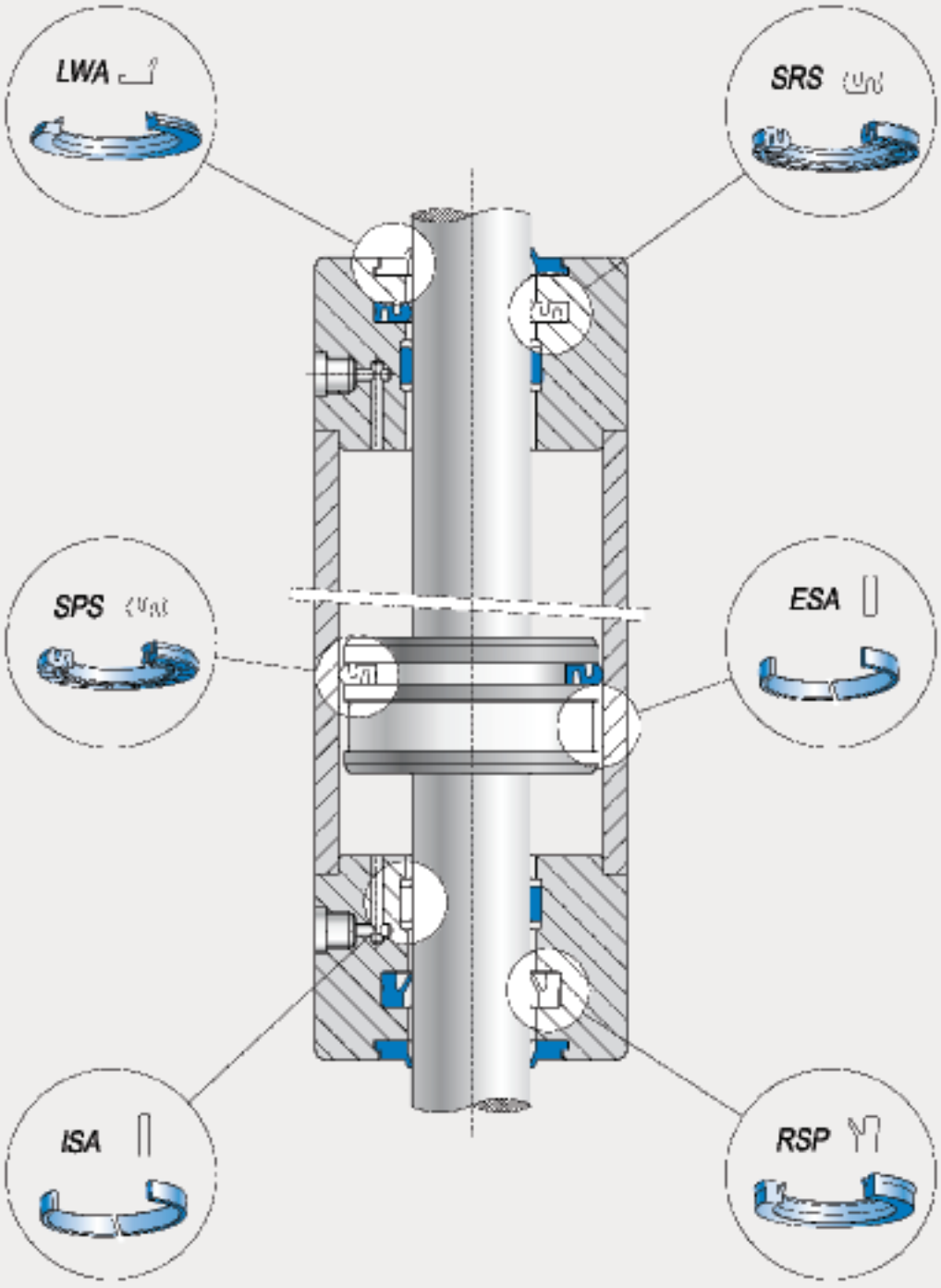

Schema cilindro pneumatico C

Pneumatic cylinder sketch C

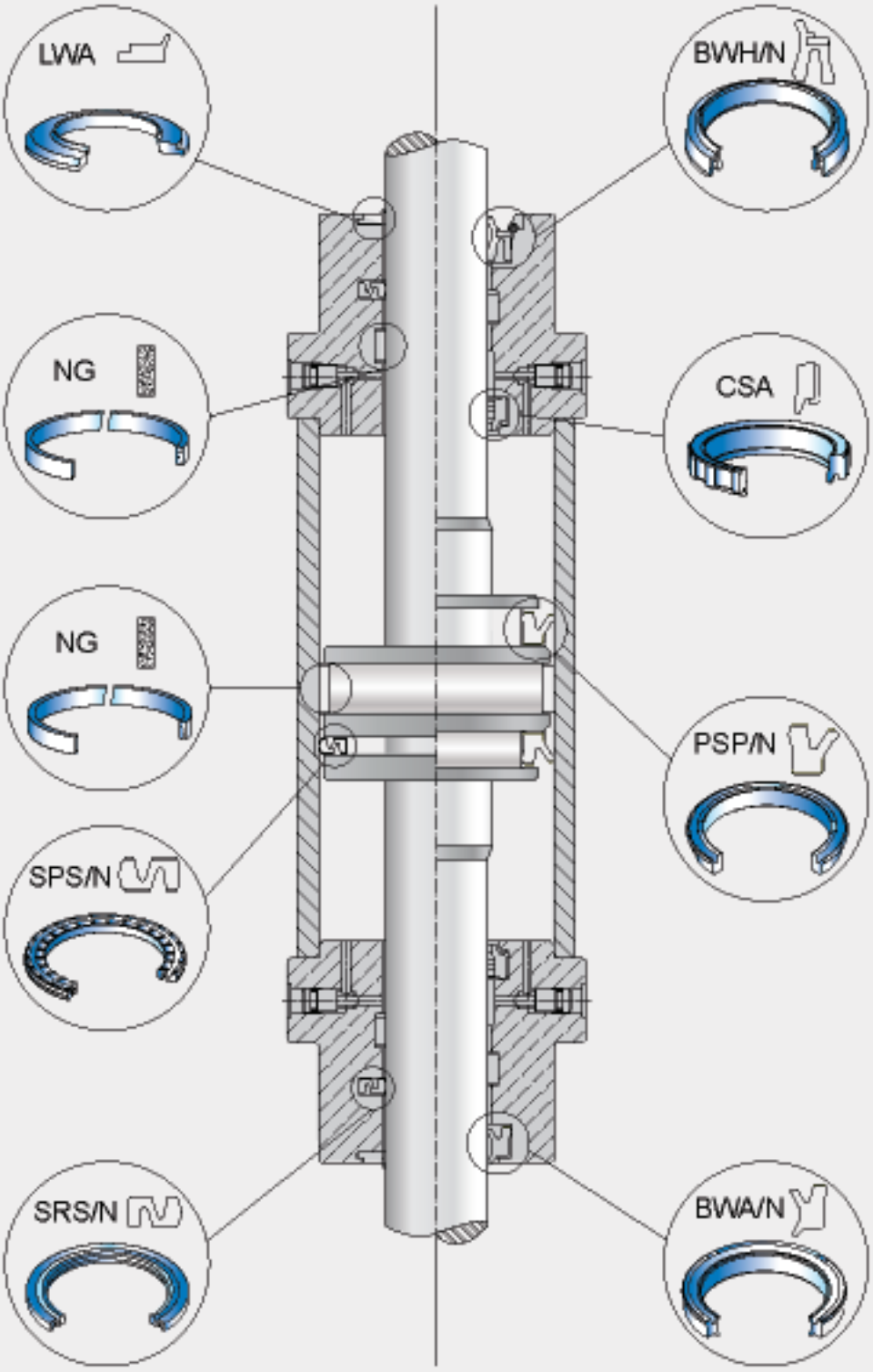

Profili
Profiles

Profilo *Profile*	Ns Rif. *Our Ref.*	Temperatura *Temperature* C°	Pressione *Pressure* Bar	Velocità *Speed* m/s	Materiale *Material*	TPU / POM / PTFE Bronzo / NBR	TPE / Resina / PTFE Carbo. / PTFE	Sezione *Section*	Pagina *Page*
GUARNIZIONI STELO / *ROD SEALS*									
Condizioni massime non simultanee / *Maximum conditions (not combined)*									
	RSP	-30 +90	< 20	< 1	TPU	●		Pneumatica *Pneumatic*	154
	SRS	-30 +90	< 20	< 1	TPU	●		Pneumatica *Pneumatic*	156
	SRS/N	-30 +100	< 12	< 1	NBR	●		Pneumatica *Pneumatic*	158
GUARNIZIONI AMMORTIZZO / *CUSHION SEALS*									
	CSA	-30 +90	< 20	< 1	TPU	●		Pneumatica *Pneumatic*	160
GUARNIZIONI PISTONE / *PISTON SEALS*									
	PSP	-30 +90	< 20	< 1	TPU	●		Pneumatica *Pneumatic*	162
	PSP/N	-30 +100	< 20	< 1	NBR	●		Pneumatica *Pneumatic*	166
	MPS	-30 +90	< 20	< 1	TPU	●		Pneumatica *Pneumatic*	168
	MPS/2	-30 +90	< 20	< 1	TPU	●		Pneumatica *Pneumatic*	170
	SPS	-30 +90	< 20	< 1	TPU	●		Pneumatica *Pneumatic*	172
	SPS/N	-30 +100	< 12	< 1	NBR	●		Pneumatica *Pneumatic*	174
	MPP	-30 +100	< 20	< 1	NBR STEEL	●		Pneumatica *Pneumatic*	176

PNEUMATICA
PNEUMATIC

ANELLI DI GUIDA / *WEAR RINGS* Condizioni massime non simultanee / *Maximum conditions (not combined)*												
Profilo *Profile*	**Ns Rif.** *Our Ref.*	**Temperatura** *Temperature* C°	**Pressione** *Pressure* Bar	**Velocità** *Speed* m/s	**Materiale** *Material*	TPU	POM	PTFE Bronzo NBR	TPE	Resina	PTFE Carbo. PTFE	**Sezione** *Section*	**Pagina** *Page*
	ISA	-35 +115	-	< 1	POM modificato/modified		○					Pneumatica *Pneumatic*	178
	ESA	-40 +115	-	< 1	POM modificato/modified		○					Pneumatica *Pneumatic*	180
	NG	-40 +200	-	15	PTFE carbografite					●		Pneumatica *Pneumatic*	184

RASCHIATORI / *WIPERS*												
	LWA	-30 +90	-	< 1	TPU	●						Pneumatica *Pneumatic*	186
	BWA	-30 +90	< 20	< 1	TPU	●						Pneumatica *Pneumatic*	188
	BWA/N	-30 +100	< 20	< 1	NBR			●				Pneumatica *Pneumatic*	190
	BWS	-30 +90	< 20	< 1	TPU	●						Pneumatica *Pneumatic*	192
	BWH	-30 +90	< 20	< 1	TPU	●						Pneumatica *Pneumatic*	196
	BWH/N	-30 +100	< 20	< 1	NBR STEEL			●				Pneumatica *Pneumatic*	198

Montaggio
Assembling

AVVERTENZE E PRECAUZIONI DI MONTAGGIO NEI SISTEMI PNEUMATICI

Per un ottimo funzionamento delle guarnizioni occorre che durante il montaggio non vengano tagliate o deformate in modo permanente.
Si raccomanda anche di rispettare le norme internazionali ISO sia per quanto riguarda le dimensioni degli alloggiamenti che per le tolleranze.
Le finiture delle superfici sono descritte nelle figure 17 e 18 sotto indicate e riportano i valori cui attenersi. La tabella sotto indica il valore in mm. per eseguire lo smusso d'invito.

Le finiture di sola rettifica non sono mai consigliate ma si raccomanda un'ulteriore lavorazione di lucidatura prima del montaggio.

ASSEMBLING INSTRUCTIONS

For a proper seals functioning it's necessary to avoid cuts or permanent deformations during the assembling process. It's also recommended to follow the ISO norms concerning housings and tolerances. Regarding the surfaces finish, take a look at the following sketches 17 and 18 indicating the values to be respected.
A further polishing operation is usually suggested before mounting, since the only grinding operation isn't recommended .

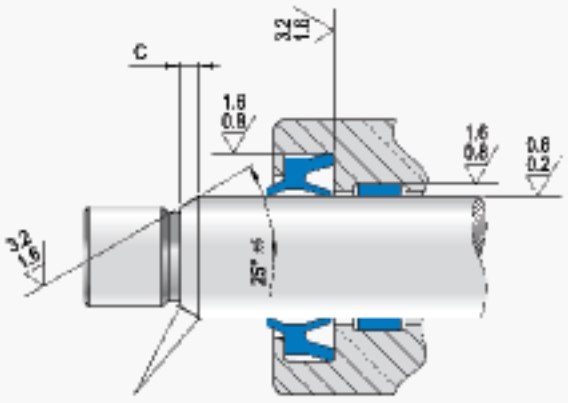

arrotondato e lucidato
rounded and polished

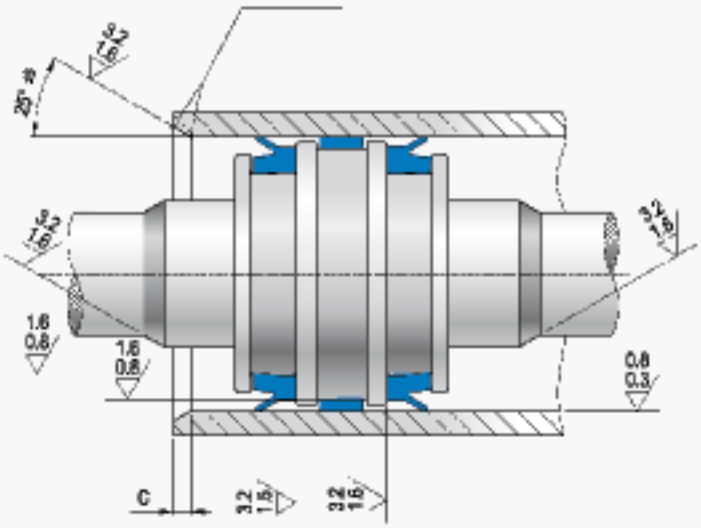

diametri D-d *diameters*	‹ 25	25-60	61-100	101-180	181-300	› 300
C mm	2,5	3,0	4,0	5,0	6,0	7,5



RSP

TENUTA STELO PER PNEUMATICA TIPO RSP

Descrizione

Alla tenuta stelo tipo RSP, rispetto a tipi similari, sono state apportate alcune modifiche sul profilo per renderla più scorrevole e più sensibile alle base pressioni.
Il labbro dinamico è arrotondato per favorire la linearità del movimento.
La profondità della gola tra il labbro dinamico e il labbro statico è più marcata per aumentare la flessibilità e per un migliore adattamento agli eventuali disallineamenti del sistema.

Limiti d'impiego

Pressione: < 20 bar
Velocità: < 1 m/s
Temperatura: da - 30° C a + 90° C
Fluidi: aria con o senza lubrificazione, oli e grassi minerali
(vedi tabella 1 a pagina 12)

Materiale

Materiale standard poliuretano a 90 Shore A.
Codice materiale: B0
Materiale alternativo poliuretano a 85 Shore A.
Codice materiale alternativo: A0

Montaggio

Eliminare tutti gli spigoli vivi e le bave nella sede per facilitare il montaggio e non danneggiare la guarnizione durante l'inserimento.
Lo stelo non deve presentare bave, e deve avere uno smusso d'invito (vedi pagina 153).

RSP TYPE ROD SEAL FOR PNEUMATIC

Description

For the RSP rod seal slight changes have been made compared to the traditional rod seals profiles.
This has been done in order to obtain the following advantages:
better sliding, lower abrasion resistance and bette performance also at low pressures. A rounded dynamic lip improve linear movements.
Deeper U-profile between the dynamic and the static lip improve flexibility and better perform in case of misalignments of the system.

Technical data

Pressure: *< 20 bar*
Speed: *< 1 m/s*
Temperature: *from - 30° C up to + 90° C*
Fluids: *air with or without lubrication, mineral oils or grease*
(see table 1, page 12)

Material

Standard polyurethane 90 Shore A.
Compound reference: B0
Alternative polyurethane 85 Shore A.
Alternative compound reference: A0

Assembling

It is important to remove flashes or cutting edges in the housing to avoid damages.
The rod doesn't present flashes and must have a lead-in chamfer (see page 153).



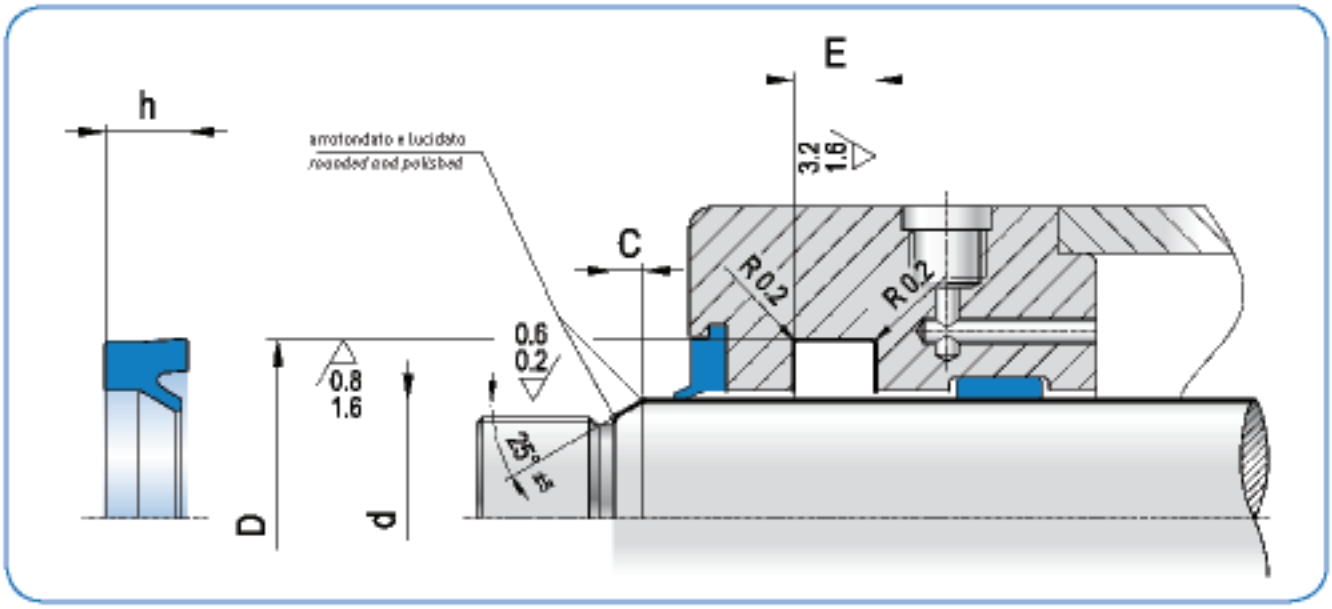

d_{f9}	D_{H10}	toll $_{H10}$	h	$E_{+0,2}$	ART / *ITEM*
3,0	6,0	+0.058/0	2,5	3,0	RSP 0030 0060 025 B0
4,0	8,0	+0.058/0	3,0	3,5	RSP 0040 0080 030 B0
5,0	9,0	+0.058/0	2,5	3,0	RSP 0050 0090 025 B0
6,0	10,0	+0.070/0	3,0	3,5	RSP 0060 0100 030 B0
6,0	11,0	+0.070/0	3,0	3,5	RSP 0060 0110 030 B0
6,0	12,0	+0.070/0	4,0	4,5	RSP 0060 0120 040 B0
7,0	13,0	+0.070/0	4,0	4,5	RSP 0070 0130 040 B0
7,0	14,0	+0.070/0	3,5	4,0	RSP 0070 0140 035 B0
8,0	14,0	+0.070/0	4,0	4,5	RSP 0080 0140 040 B0
8,0	14,0	+0.070/0	4,5	5,0	RSP 0080 0140 045 B0
8,0	16,0	+0.070/0	4,5	5,0	RSP 0080 0160 045 B0
10,0	16,0	+0.070/0	4,5	5,0	RSP 0100 0160 045 B0
10,0	18,0	+0.070/0	5,5	6,0	RSP 0100 0180 055 B0
11,0	19,0	+0.070/0	4,0	4,5	RSP 0110 0190 040 B0
12,0	20,0	+0.084/0	5,5	6,0	RSP 0120 0200 055 B0
12,0	24,0	+0.084/0	6,0	6,5	RSP 0120 0240 060 B0
14,0	22,0	+0.084/0	5,5	6,0	RSP 0140 0220 055 B0
16,0	22,0	+0.084/0	3,0	3,5	RSP 0160 0220 030 B0
16,0	24,0	+0.084/0	5,5	6,0	RSP 0160 0240 055 B0
18,0	26,0	+0.084/0	5,5	6,0	RSP 0180 0260 055 B0
20,0	28,0	+0.084/0	5,5	6,0	RSP 0200 0280 055 B0
22,0	28,0	+0.100/0	4,5	5,0	RSP 0220 0280 045 B0
22,0	30,0	+0.100/0	5,5	6,0	RSP 0220 0300 055 B0
25,0	33,0	+0.100/0	5,5	6,0	RSP 0250 0330 055 B0
28,0	36,0	+0.100/0	5,5	6,0	RSP 0280 0360 055 B0
28,0	38,0	+0.100/0	7,0	7,5	RSP 0280 0380 070 B0
30,0	38,0	+0.100/0	5,5	6,0	RSP 0300 0380 055 B0

d_{f9}	D_{H10}	toll $_{H10}$	h	$E_{+0,2}$	ART / *ITEM*
30,0	40,0	+0.100/0	7,0	7,5	RSP 0300 0400 070 B0
32,0	40,0	+0.100/0	5,5	6,0	RSP 0320 0400 055 B0
35,0	43,0	+0.100/0	8,0	8,5	RSP 0350 0430 080 B0
35,0	45,0	+0.100/0	7,0	7,5	RSP 0350 0450 070 B0
35,0	45,0	+0.100/0	10,0	10,5	RSP 0350 0450 100 B0
36,0	46,0	+0.100/0	7,0	7,5	RSP 0360 0460 070 B0
40,0	48,0	+0.100/0	5,5	6,0	RSP 0400 0480 055 B0
40,0	50,0	+0.100/0	7,0	7,5	RSP 0400 0500 070 B0
45,0	55,0	+0.120/0	7,0	7,5	RSP 0450 0550 070 B0
50,0	60,0	+0.120/0	7,0	7,5	RSP 0500 0600 070 B0
55,0	65,0	+0.120/0	7,0	7,5	RSP 0550 0650 070 B0
56,0	66,0	+0.120/0	7,0	7,5	RSP 0560 0660 070 B0
60,0	72,0	+0.120/0	8,5	9,5	RSP 0600 0720 085 B0
63,0	73,0	+0.120/0	7,0	7,5	RSP 0630 0730 070 B0
63,0	75,0	+0.120/0	8,5	9,5	RSP 0630 0750 085 B0
65,0	77,0	+0.120/0	8,5	9,5	RSP 0650 0770 085 B0
70,0	82,0	+0.120/0	8,5	9,5	RSP 0700 0820 085 B0
75,0	87,0	+0.120/0	8,5	9,5	RSP 0750 0870 085 B0
80,0	92,0	+0.120/0	8,5	9,5	RSP 0800 0920 085 B0
85,0	97,0	+0.120/0	8,5	9,5	RSP 0850 0970 085 B0
90,0	102,0	+0.120/0	8,5	9,5	RSP 0900 1020 085 B0
95,0	107,0	+0.120/0	8,5	9,5	RSP 0950 1070 085 B0
100,0	115,0	+0.120/0	10,0	11,0	RSP 1000 1150 100 B0



SRS

TENUTA STELO A MOLLA TIPO SRS

Descrizione

La guarnizione tipo SRS è progettata per la tenuta stelo di cilindri pneumatici.
Dove gli ingombri lo permettono, può essere utilizzata anche su valvole pneumatiche.
Le ridotte dimensioni delle sedi consentono un'esecuzione di lavorazione macchina semplice.
Ha un profilo arrotondato al centro sul labbro dinamico e due sporgenze sul labbro statico.
Il profilo simmetrico ne facilita il montaggio.
La particolare forma a molla rende il sistema molto scorrevole anche a bassa pressione.

Limiti d'impiego

Pressione: < 20 bar
Velocità: < 1 m/s
Temperatura: da - 30° C a + 90° C
Fluidi: aria con o senza lubrificazione, oli e grassi minerali
(vedi tabella 1 a pagina 12)

Materiale

Materiale standard poliuretano a 90 Shore A.
Codice materiale standard: B0
Materiale alternativo poliuretano a 85 Shore A.
Codice materiale alternativo: A0

Montaggio

Eliminare tutti gli spigoli vivi e le bave sullo stelo per evitare di compromettere la guarnizione.

SRS TYPE SPRING ROD SEAL

Description

The SRS rod seal has been designed for pneumatic cylinder applications.
The SRS can also be used for pneumatic valves where allowed by the overall dimensions.
Moreover a shorter machining of the system can be obtained thanks to the reduced overall dimensions.
The profile is rounded in the middle of the dynamic lip and it has two projections on the static lip.
This symmetric shape allows easier installation. The special spring shaped profile ensures high flexibility in the system even at low pressure.

Technical data

Pressure: *< 20 bar*
Speed: *< 1 m/s*
Temperature: *from - 30° C up to + 90° C*
Fluids: *air with or without lubrication, mineral oils or grease*
(see table 1, page 12)

Material

Standard polyurethane 90 Shore A.
Standard compound reference: B0
Alternative polyurethane 85 Shore A.
Alternative compound reference: A0

Assembling

It is important to remove flashes or cutting edges in the housing to avoid damages.

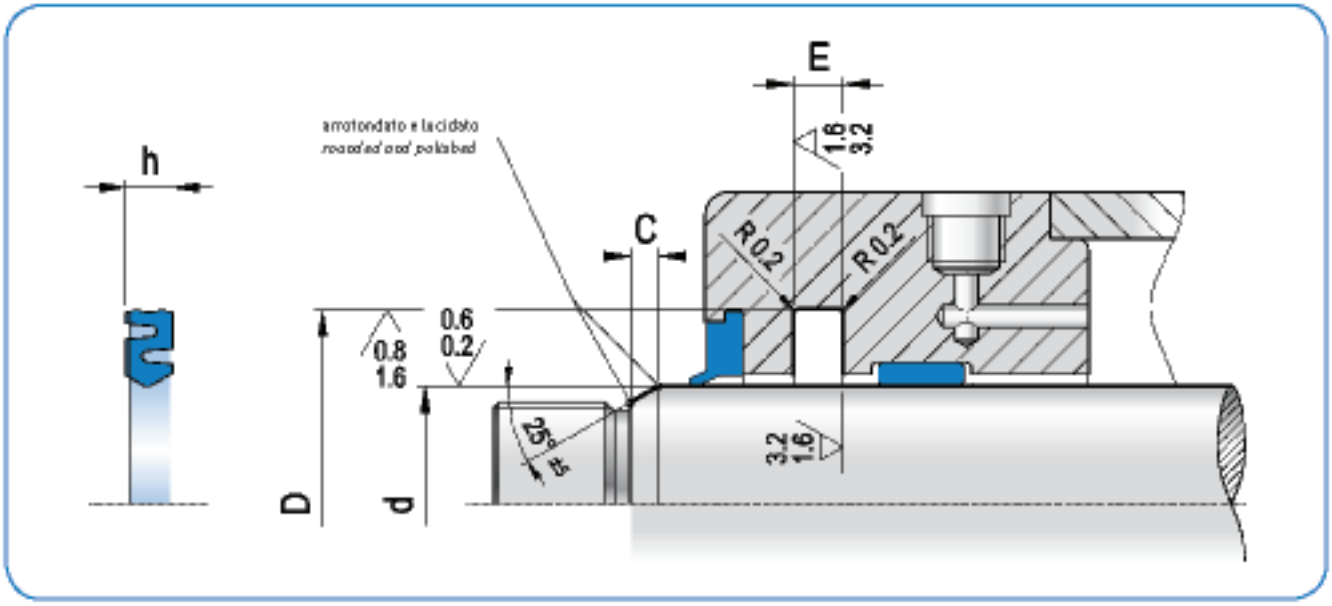

d_{f9}	D_{H10}	toll H10	h	$E_{+0,2}$	ART / *ITEM*
6,0	13,0	+0,043/0	2,3	2,5	SRS 0060 0130 023 B0
8,0	15,0	+0,043/0	2,3	2,5	SRS 0080 0150 023 B0
10,0	17,0	+0,043/0	2,3	2,5	SRS 0100 0170 023 B0
12,0	19,0	+0,052/0	2,3	2,5	SRS 0120 0190 023 B0
14,0	21,0	+0,052/0	2,3	2,5	SRS 0140 0210 023 B0
15,0	22,0	+0,052/0	2,3	2,5	SRS 0150 0220 023 B0
16,0	25,0	+0,052/0	2,8	3,0	SRS 0160 0250 028 B0
20,0	29,0	+0,052/0	2,8	3,0	SRS 0200 0290 028 B0
25,0	34,0	+0,062/0	2,8	3,0	SRS 0250 0340 028 B0
30,0	39,0	+0,062/0	2,8	3,0	SRS 0300 0390 028 B0
40,0	49,0	+0,062/0	2,8	3,0	SRS 0400 0490 028 B0
42,0	51,0	+0,074/0	2,8	3,0	SRS 0420 0510 028 B0
50,0	59,0	+0,074/0	2,8	3,0	SRS 0500 0590 028 B0



SRS/N

TENUTA STELO A MOLLA TIPO SRS/N

Descrizione

La guarnizione tipo SRS/N è realizzata per tenuta pistone di cilindri pneumatici.
Dove gli ingombri lo permettono può essere utilizzata anche su valvole pneumatiche.
Le ridotte dimensioni delle sedi,consentono un'esecuzione di lavorazione macchina veloce e semplice.
Il profilo simmetrico ne facilita il montaggio.
La particolare forma a molla rende il sistema molto scorrevole anche a bassissima pressione.

Limiti d'impiego

Pressione:	< 12 [bar]
Velocità:	< 1 [m/s]
Temperatura:	-30 °C ÷ +100 °C mescola NBR
	-15 °C ÷ +150 °C mescola FKM
Fluidi:	Aria lubrificata,grassi e oli minerali (vedi tabella 1 a pagina 12)

Materiale

Il materiale standard è NBR 80 Shore A.
A richiesta materiale FKM 75 Shore A.
Codice materiale standard: N1

Montaggio

Eliminare spigoli vivi e le bave per non danneggiare la tenuta al momento del montaggio

SRS/N TYPE SPRING ROD SEAL

Description

The seal type SRS / N is a rod seal for pneumatic cylinders.
The SRS/N can also be used for pneumatic valves where allowed by the overall dimensions.
The reduced dimensions of the seat allows fast and simple machining operations.
This symmetric profile allows easier installation The special spring shape ensure a system sliding even a very low pressure.

Technical data

Pressure:	*< 12 [bar]*
Speed:	*< 1 [m/s]]*
Temperature:	*-30 °C ÷ +100 °C mescola NBR*
	-15 °C ÷ +150 °C mescola FKM
Fluids:	*Lubricated air, grease and mineral oils (see table 1, page 12)*

Material

Standard material is NBR 80 Shore A.
On demand material FKM 75 Shore A
Standard compound reference: N1

Assembling

It is important to remove flashes or cutting edges in the housing to avoid damages.

SRS/N



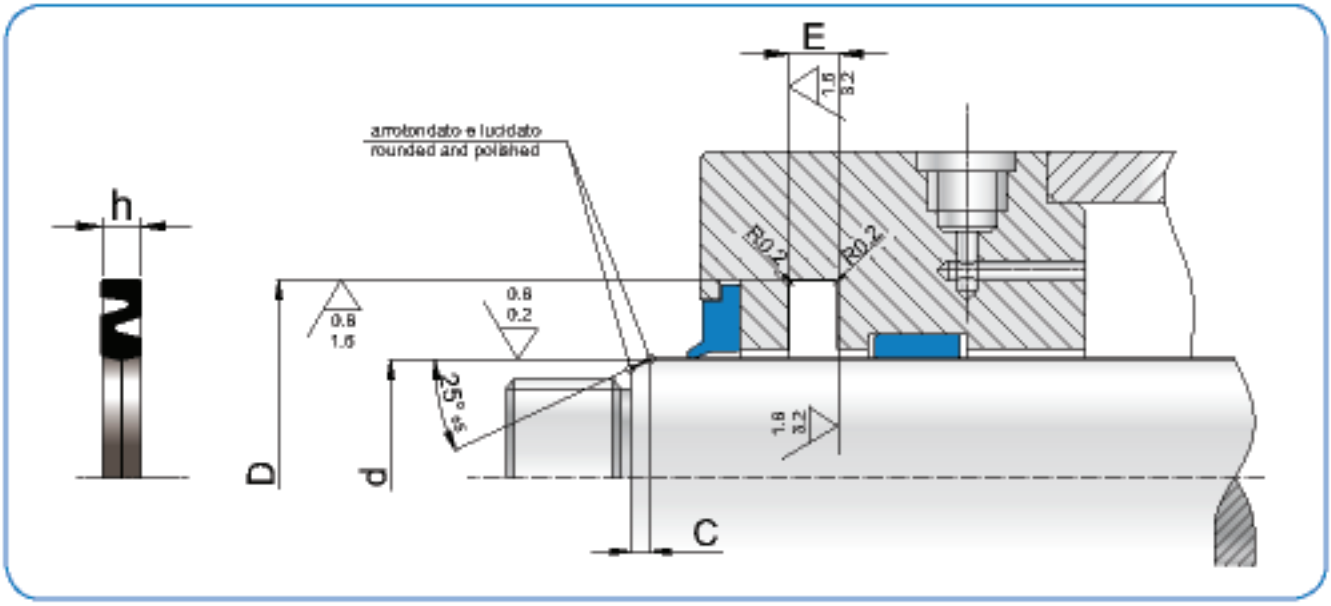

d_{f9}	D_{H10}	Toll h10	h	$E_{+0,2}$	ART / *ITEM*
6,0	13,0	0/-0,043	2,30	2,50	SRS 0060 0130 023 N1
8,0	15,0	0/-0,043	2,30	2,50	SRS 0080 0150 023 N1
10,0	17,0	0/-0,043	2,30	2,50	SRS 0100 0170 023 N1
12,0	19,0	0/-0,052	2,30	2,50	SRS 0120 0190 023 N1
14,0	21,0	0/-0,052	2,30	2,50	SRS 0140 0210 023 N1
15,0	22,0	0/-0,052	2,30	2,50	SRS 0150 0220 023 N1
16,0	25,0	0/-0,052	2,80	3,00	SRS 0160 0250 028 N1
20,0	29,0	0/-0,052	2,80	3,00	SRS 0200 0290 028 N1
25,0	34,0	0/-0,062	2,80	3,00	SRS 0250 0340 028 N1
30,0	49,0	0/-0,062	2,80	3,00	SRS 0300 0390 028 N1
40,0	51,0	0/-0,062	2,80	3,00	SRS 0400 0490 028 N1
42,0	59,0	0/-0,074	2,80	3,00	SRS 0420 0510 028 N1
50,0	50,0	0/-0,074	2,80	3,00	SRS 0500 0590 028 N1



CSA

GUARNIZIONI AMMORTIZZO TIPO CSA

Descrizione

L'elemento d'ammortizzo tipo CSA è studiato per la frenatura di fine corsa nei pistoni dei cilindri pneumatici.
Diverse sono le caratteristiche che concorrono all'efficacia del sistema frenante della guarnizione CSA:
- il profilo raschiante con lo smusso d'invito che facilita l'inserimento dell'ogiva;
- le scanalature all'esterno che permettono l'allineamento;
- il bordo alla base dell'ammortizzo;
- l'utilizzo del poliuretano che grazie al suo alto modulo elastico e alla sua alta resistenza all'urto garantisce una lunga durata in esercizio.

Limiti d'impiego

Pressione:	< 20 bar
Velocità:	< 1 m/s
Temperatura:	da - 30° C a + 90° C
Fluidi:	aria con o senza lubrificazione, oli e grassi minerali (vedi tabella 1 a pagina 12)

Materiale

Il materiale standard è un poliuretano a basso compression-set con una buona flessibilità a freddo
Materiale standard poliuretano a 90 Shore A.
Codice materiale standard: B0
Materiale alternativo poliuretano a 93 Shore A.
Codice materiale alternativo: C0

Montaggio

Il montaggio avviene in sede semiaperta, pertanto si consiglia di eliminare tutti gli spigoli vivi e le bave per evitare di compromettere la guarnizione.
Lubrificare con grasso per assicurare una maggiore durata della guarnizione.

CSA TYPE CUSHIONING SEAL

Description

The CSA cushioning seal is designed for braking points at the end-stroke of pneumatic cylinders.
Several elements contribute to the increased efficiency of the CSA seal braking system:
- *the scraping profile with lead-in chamfer for better insertion of the shoulder;*
- *the external grooves granting auto-alignment;*
- *the edge at the bottom of the cushioning;*
- *the use of polyurethane which ensures a long service life thanks to the high modulus of elasticity and the very good impact resistance..*

Technical data

Pressure:	*< 20 bar*
Speed:	*< 1 m/s*
Temperature:	*from - 30° C up to + 90° C*
Fluids:	*air with or without lubrication, mineral oils or grease (see table 1, page 12)*

Material

The standard raw material is a low compression-set polyurethane with good flexibility at low temperature.
Standard polyurethane 90 Shore A.
Standard compound reference: B0
Alternative polyurethane 93 Shore A.
Alternative compound reference: C0

Assembling

The assembling is done in semi-open groove, therefore cutting edges or flashes should be removed otherwise they may influence the sealing performance.
Lubrication with grease will increase lifetime of the seal.

CSA



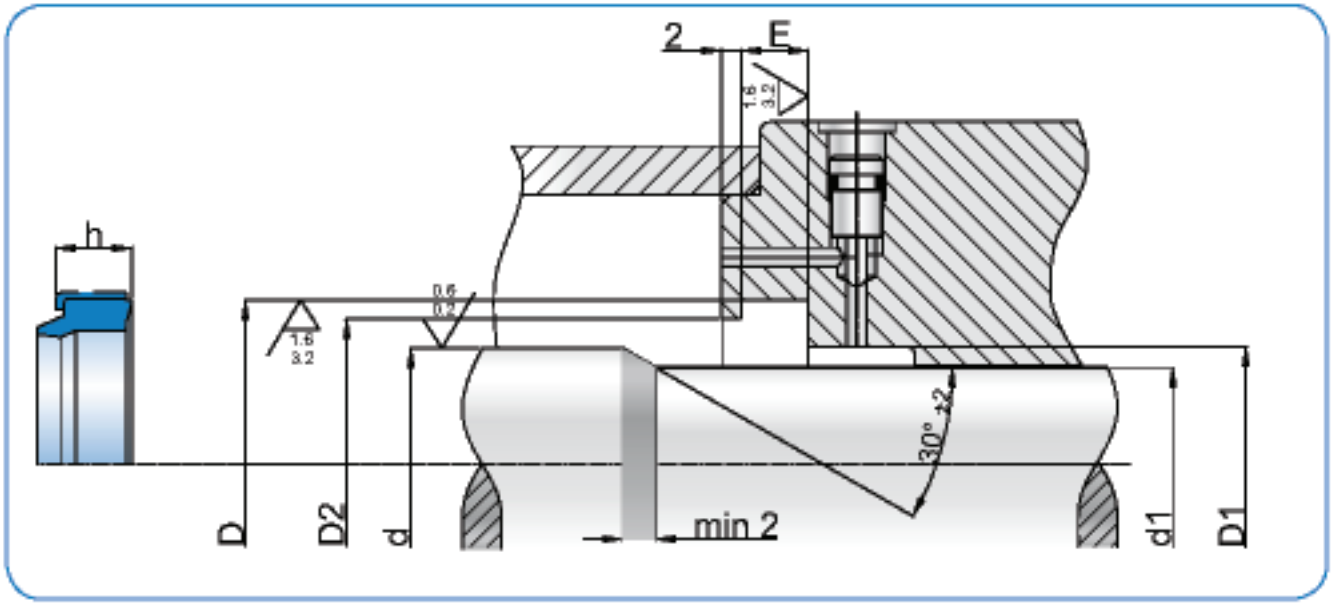

d_{H10}	toll $_{H10}$	D_{H11}	D_1	D_2	d_1	h	E	ART / *ITEM*
6,0	0/-0.048	10,0	6,5	8,0	4,5	3,4	3,7	CSA 0060 0100 034 B0
8,0	0/-0.058	11,6	8,5	10,0	7,0	3,0	3,3	CSA 0080 0116 030 B0
9,5	0/-0.058	15,0	10,0	12,0	8,0	4,0	4,5	CSA 0095 0150 040 B0
10,0	0/-0.058	18,0	11,0	15,0	8,0	6,5	7,0	CSA 0100 0180 065 B0
12,0	0/-0.070	18,0	13,0	15,5	10,0	4,3	4,8	CSA 0120 0180 043 B0
12,0	0/-0.070	20,0	13,0	17,0	10,0	6,5	7,0	CSA 0120 0200 065 B0
14,0	0/-0.070	22,0	15,0	19,0	12,0	6,5	7,0	CSA 0140 0220 065 B0
16,0	0/-0.070	22,0	17,0	19,5	14,0	4,7	5,2	CSA 0160 0220 047 B0
16,0	0/-0.070	24,0	17,0	21,0	14,0	6,5	7,0	CSA 0160 0240 065 B0
18,0	0/-0.070	26,0	19,0	23,0	16,0	6,5	7,0	CSA 0180 0260 065 B0
20,0	0/-0.084	28,0	21,0	24,0	17,5	6,5	7,0	CSA 0200 0280 065 B0
22,0	0/-0.084	30,0	23,0	26,0	19,5	6,5	7,0	CSA 0220 0300 065 B0
25,0	0/-0.084	33,0	26,0	29,0	22,5	6,5	7,0	CSA 0250 0330 065 B0
28,0	0/-0.084	36,0	29,0	32,0	25,5	6,5	7,0	CSA 0280 0360 065 B0
30,0	0/-0.084	40,0	31,5	35,0	27,5	6,5	7,0	CSA 0300 0400 065 B0
32,0	0/-0.084	42,0	33,5	37,0	29,0	6,5	7,0	CSA 0320 0420 065 B0
36,0	0/-0.100	46,0	37,5	41,0	33,0	6,5	7,0	CSA 0360 0460 065 B0
40,0	0/-0.100	50,0	41,5	45,0	37,0	6,5	7,0	CSA 0400 0500 065 B0
50,0	0/-0.100	60,0	51,5	55,0	47,0	6,5	7,0	CSA 0500 0600 065 B0
57,0	0/-0.120	74,0	60,0	65,0	54,0	12,0	12,5	CSA 0570 0740 120 B0
70,0	0/-0.120	87,0	73,0	78,0	66,0	12,0	12,5	CSA 0700 0870 120 B0
78,0	0/-0.120	95,0	81,0	86,0	74,0	12,0	12,5	CSA 0780 0950 120 B0

Nota: altre dimensioni non a catalogo a richiesta. Consultare il nostro ufficio tecnico.

Remark: please contact our technical dept. for further dimensions not included in the catalogue.



PSP

TENUTA PISTONE PER PNEUMATICA TIPO PSP

Descrizione

La tenuta tipo PSP è progettata per la tenuta pistone di cilindri pneumatici a semplice e doppio effetto.

La gola molto marcata tra il labbro dinamico e quello statico unitamente alla raggiatura dei due labbri di contatto aumentano la scorrevolezza della guarnizione anche in assenza di lubrificazione.
Le limitate dimensioni e l'alta flessibilità del materiale rendono semplice il montaggio anche in cava chiusa.

Limiti d'impiego

Pressione: < 20 bar
Velocità: < 1 m/s
Temperatura: da - 30° C a + 90° C
Fluidi: aria con o senza lubrificazione, oli e grassi minerali
(vedi tabella 1 a pagina 12)

Materiale

Materiale standard poliuretano a 90 Shore A.
Codice materiale standard: B0
Materiale alternativo poliuretano a 85 Shore A.
Codice materiale alternativo: A0

Montaggio

Eliminare tutti gli spigoli vivi e le bave nella sede del pistone per evitare di compromettere la guarnizione
Eseguire uno smusso sulla camicia del cilindro (vedi pagina 153) per facilitare il montaggio.
Si consiglia di lubrificare la guarnizione per rendere il sistema molto scorrevole.

PSP TYPE PISTON SEAL FOR PNEUMATICS

Description

The PSP piston seal has been designed for single and double action pneumatic cylinders.
The deep groove between the dynamic and the static lip, together with back-to-back lips radius, enhance seal sliding, even where there is a lack of environmental lubrication.
The reduced dimensions, together with the high flexibility of the material, also facilitate installation in closed grooves.

Technical data

Pressure: *< 20 bar*
Speed: *< 1 m/s*
Temperature: *from - 30° C up to + 90° C*
Fluids: *air with or without lubrication, mineral oils or grease*
(see table 1, page 12)

Material

Standard polyurethane 90 Shore A.
Standard compound reference: B0
Alternative polyurethane 85 Shore A.
Alternative compound reference: A0

Assembling

It is important to remove flashes or cutting edges in the housing to avoid damages.
The rod doesn't have flashes and must present a lead-in chamfer (see page 153).

PSP



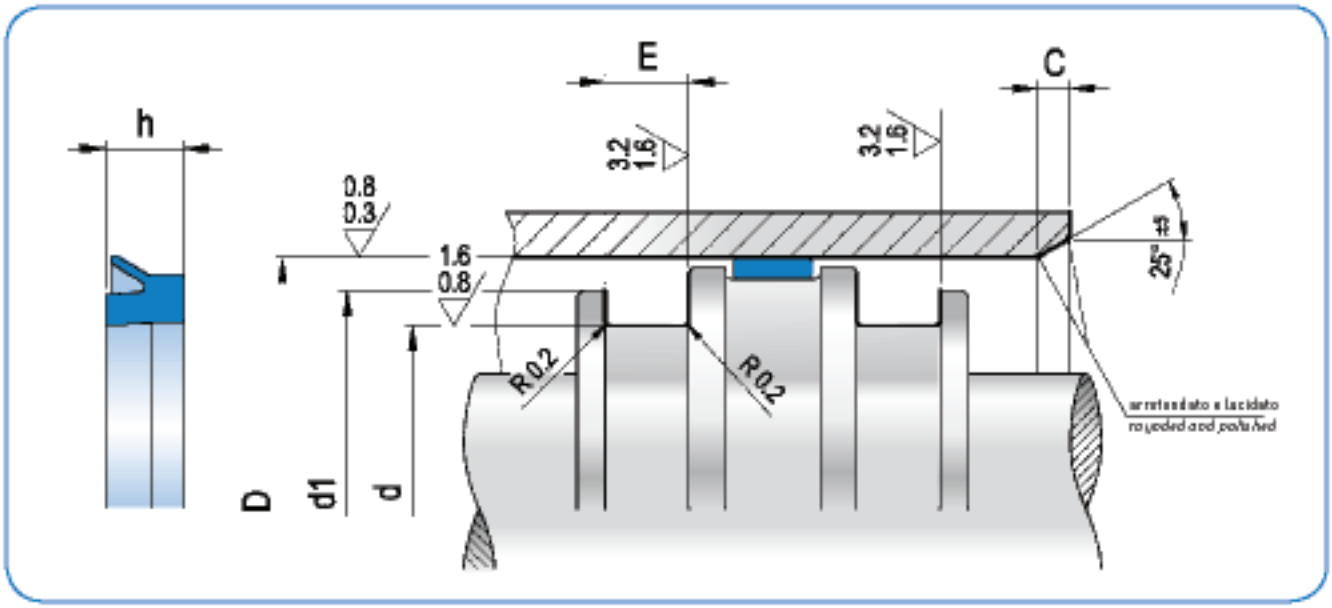

D_{H11}	d_{h10}	Toll. H10	d_1*	h	$E_{+0,2}$	ART / ITEM
6,0	3,0	0/-0.048	5,0	2,00	2,50	PSP 0060 0030 020 B0
8,0	4,0	0/-0.048	7,0	2,55	3,00	PSP 0080 0040 025 B0
8,0	4,8	0/-0.048	7,0	2,30	2,70	PSP 0080 0048 023 B0
8,0	4,8	0/-0.048	7,0	2,55	3,00	PSP 0080 0048 025 B0
10,0	6,0	0/-0.048	9,0	2,55	3,00	PSP 0100 0060 025 B0
12,0	7,0	0/-0.058	11,0	2,55	3,00	PSP 0120 0070 025 B0
13,0	8,0	0/-0.058	12,0	2,55	3,00	PSP 0130 0080 025 B0
14,0	8,0	0/-0.058	13,0	2,55	3,00	PSP 0140 0080 025 B0
15,0	9,0	0/-0.058	14,0	2,55	3,00	PSP 0150 0090 025 B0
16,0	10,0	0/-0.058	15,0	2,55	3,00	PSP 0160 0100 025 B0
17,0	11,0	0/-0.070	16,0	2,55	3,00	PSP 0170 0110 025 B0
18,0	12,0	0/-0.070	17,0	2,55	3,00	PSP 0180 0120 025 B0
20,0	14,0	0/-0.070	19,0	2,55	3,00	PSP 0200 0140 025 B0
20,0	14,0	0/-0.070	19,0	4,00	4,50	PSP 0200 0140 040 B0
20,0	15,5	0/-0.070	19,0	4,00	4,50	PSP 0200 0155 040 B0
22,0	16,0	0/-0.070	21,0	2,55	3,00	PSP 0220 0160 025 B0
24,0	12,0	0/-0.070	23,0	6,50	7,50	PSP 0240 0120 065 B0
24,0	18,0	0/-0.070	23,0	2,55	3,00	PSP 0240 0180 025 B0
25,0	17,0	0/-0.070	24,0	5,50	6,00	PSP 0250 0170 055 B0
25,0	19,0	0/-0.084	24,0	3,25	3,50	PSP 0250 0190 032 B0
25,0	19,0	0/-0.084	24,0	4,00	4,50	PSP 0250 0190 040 B0
27,0	21,0	0/-0.084	26,0	3,25	4,00	PSP 0270 0210 032 B0
28,0	18,0	0/-0.084	27,0	7,00	7,50	PSP 0280 0180 070 B0
28,0	22,0	0/-0.084	27,0	3,25	3,50	PSP 0280 0220 032 B0
30,0	20,0	0/-0.084	29,0	5,00	6,00	PSP 0300 0200 050 B0
30,0	22,0	0/-0.084	29,0	3,25	3,50	PSP 0300 0220 032 B0
32,0	24,0	0/-0.084	31,0	3,25	3,50	PSP 0320 0240 032 B0

D_{H11}	d_{h10}	Toll. H10	d_1*	h	$E_{+0,2}$	ART / ITEM
32,0	24,0	0/-0.084	31,0	5,50	6,00	PSP 0320 0240 055 B0
35,0	27,0	0/-0.084	34,0	3,25	3,50	PSP 0350 0270 032 B0
36,0	28,0	0/-0.084	35,0	3,25	3,50	PSP 0360 0280 032 B0
38,0	30,0	0/-0.084	37,0	3,25	3,50	PSP 0380 0300 032 B0
38,0	30,0	0/-0.084	37,0	5,50	6,00	PSP 0380 0300 055 B0
40,0	27,3	0/-0.084	39,0	6,40	7,50	PSP 0400 0273 064 B0
40,0	30,0	0/-0.084	39,0	7,00	7,50	PSP 0400 0300 070 B0
40,0	32,0	0/-0.100	39,0	3,25	3,50	PSP 0400 0320 032 B0
42,0	30,0	0/-0.100	41,0	6,00	6,50	PSP 0420 0300 060 B0
42,0	34,0	0/-0.100	41,0	3,25	3,50	PSP 0420 0340 032 B0
45,0	35,0	0/-0.100	44,0	10,00	11,00	PSP 0450 0350 100 B0
45,0	37,0	0/-0.100	44,0	3,25	3,50	PSP 0450 0370 032 B0
50,0	40,0	0/-0.100	49,0	5,00	6,00	PSP 0500 0400 050 B0
50,0	40,0	0/-0.100	49,0	7,00	7,50	PSP 0500 0400 070 B0
50,0	42,0	0/-0.100	49,0	3,25	3,50	PSP 0500 0420 032 B0
52,0	42,0	0/-0.100	51,0	4,25	4,50	PSP 0520 0420 042 B0
55,0	45,0	0/-0.100	54,0	7,00	7,50	PSP 0550 0450 070 B0
58,0	48,0	0/-0.100	57,0	4,25	4,50	PSP 0580 0480 042 B0
60,0	50,0	0/-0.120	59,0	5,00	5,70	PSP 0600 0500 050 B0
60,0	50,0	0/-0.120	59,0	7,00	7,50	PSP 0600 0500 070 B0
63,0	53,0	0/-0.120	62,0	4,25	4,50	PSP 0630 0530 042 B0
63,0	53,0	0/-0.120	62,0	7,00	7,50	PSP 0630 0530 070 B0
65,0	55,0	0/-0.120	64,0	5,00	6,00	PSP 0650 0550 050 B0
65,0	55,0	0/-0.120	64,0	7,00	7,50	PSP 0650 0550 070 B0
68,0	58,0	0/-0.120	67,0	4,70	5,50	PSP 0680 0580 047 B0
70,0	58,0	0/-0.120	69,0	8,50	9,50	PSP 0700 0580 085 B0
75,0	63,0	0/-0.120	74,0	8,50	9,50	PSP 0750 0630 085 B0

* diametro di aggancio consigliato ma modificabile in funzione delle esigenze di montaggio

recommended hook diameter which could be modified according to mounting demand



PSP

D_{H11}	d_{h10}	Toll. H10	d1*	h	$E_{\pm 0,2}$	ART / ITEM
80,0	67,3	0/-0.120	79,0	6,35	7,00	PSP 0800 0673 063 B0
80,0	68,0	0/-0.120	79,0	8,50	9,50	PSP 0800 0680 085 B0
80,0	70,0	0/-0.120	79,0	4,25	4,50	PSP 0800 0700 042 B0
85,0	73,0	0/-0.120	84,0	8,50	9,50	PSP 0850 0730 085 B0
90,0	78,0	0/-0.120	89,0	8,50	9,50	PSP 0900 0780 085 B0
90,0	80,0	0/-0.120	89,0	4,25	4,50	PSP 0900 0800 042 B0
100,0	88,0	0/-0.140	99,0	8,50	9,50	PSP 1000 0880 085 B0
100,0	90,0	0/-0.140	99,0	4,25	4,50	PSP 1000 0900 042 B0
110,0	95,0	0/-0.140	109,0	10,00	11,00	PSP 1100 0950 100 B0
120,0	105,0	0/-0.140	119,0	10,00	11,00	PSP 1200 1050 100 B0
125,0	105,0	0/-0.140	124,0	8,25	8,50	PSP 1250 1050 082 B0
125,0	110,0	0/-0.140	124,0	10,00	11,00	PSP 1250 1100 100 B0

D_{H11}	d_{h10}	Toll. H10	d1*	h	$E_{\pm 0,2}$	ART / ITEM
140,0	120,0	0/-0.140	139,0	8,25	8,50	PSP 1400 1200 082 B0
160,0	140,0	0/-0.160	159,0	8,25	8,50	PSP 1600 1400 082 B0
160,0	145,0	0/-0.160	159,0	10,00	11,00	PSP 1600 1450 100 B0
180,0	160,0	0/-0.160	179,0	14,00	15,00	PSP 1800 1600 140 B0
200,0	180,0	0/-0.160	199,0	8,25	8,50	PSP 2000 1800 082 B0
200,0	180,0	0/-0.160	199,0	14,00	15,00	PSP 2000 1800 140 B0
250,0	230,0	0/-0.185	249,0	14,00	15,00	PSP 2500 2300 140 B0

* diametro di aggancio consigliato ma modificabile in funzione delle esigenze di montaggio
recommended hook diameter which could be modified according to mounting demand



PSP/N

TENUTA PISTONE TIPO PSP/N

Descrizione

La PSP/N è una tenuta a labbro in NBR 70 Shore A che ha impieghi su pistone per cilindri a semplice e doppio effetto.
Creata con un labbro dinamico arrotondato per poter muoversi anche a bassissime pressioni. Sul labbro statico e dinamico sono state create delle sporgenze che NON permettono il rovesciamento in sede, anche quando si verificano delle inversioni in assenza di pressione.
Alla base e sul fianco ci sono dei notches che evitano, in presenza di pressione tra le due tenute creatasi da micro perdite, di espellere la guarnizione.

Limiti d'impiego

Pressione: < 20 bar
Velocità: < 1 m/s
Temperatura: da - 30° C a + 100° C
Fluidi: aria lubrificata
(vedi tabella 1 a pagina 12)

Materiale

Il materiale standard è una mescola di NBR 70 Shore A. E' possibile fornire, per impieghi diversi, mescole in HNBR, EPDM, FKM e VMQ.

Montaggio

Eliminare sporgenze e spigoli taglienti sul pistone per evitare durante il montaggio, il danneggiamento della tenuta.
E' buona norma ingrassare la guarnizione sul pistone prima del montaggio.

1 - distanziale per autoallineamento
2 - raggio
3 - notches antiespulsione

PSP/N TYPE PISTON SEAL TYPE

Description

The PSP/N is a lip seal in NBR 70 Shore A used in single cylinder and double effect pistons.
Created with a rounded dynamic lip which moves even at very low pressure.
On the static and dynamic lip, there're protrusions avoiding any possibility of reversion in the groove even case of inversion without pressure.
There are also notches on the base and on the side avoiding the possibility of seal ejection when, in consequence of micro-leakages, there's pressure between the two seals.

Technical data

Pressure: < 20 bar
Speed: <= 1 m/s
Temperature: from - 30° C up to + 100° C
Fluids: lubricated air
(see table 1, page 12)

Material

Standard material is a compound NBR 70 Shore A. For different applications HNBR, EPDM, FKM and VMQ compounds can be also supplied.

Assembling

Eliminate sharp edges and protrusions on the piston to avoid, seal damages during the assembling..
Grease the seal on the piston before fitting.

1 - aligning spacer
2 - radius
3 - anti ejects notches

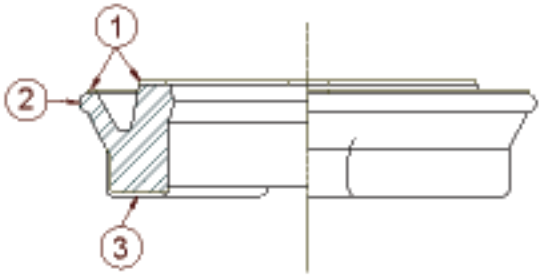

PSP/N



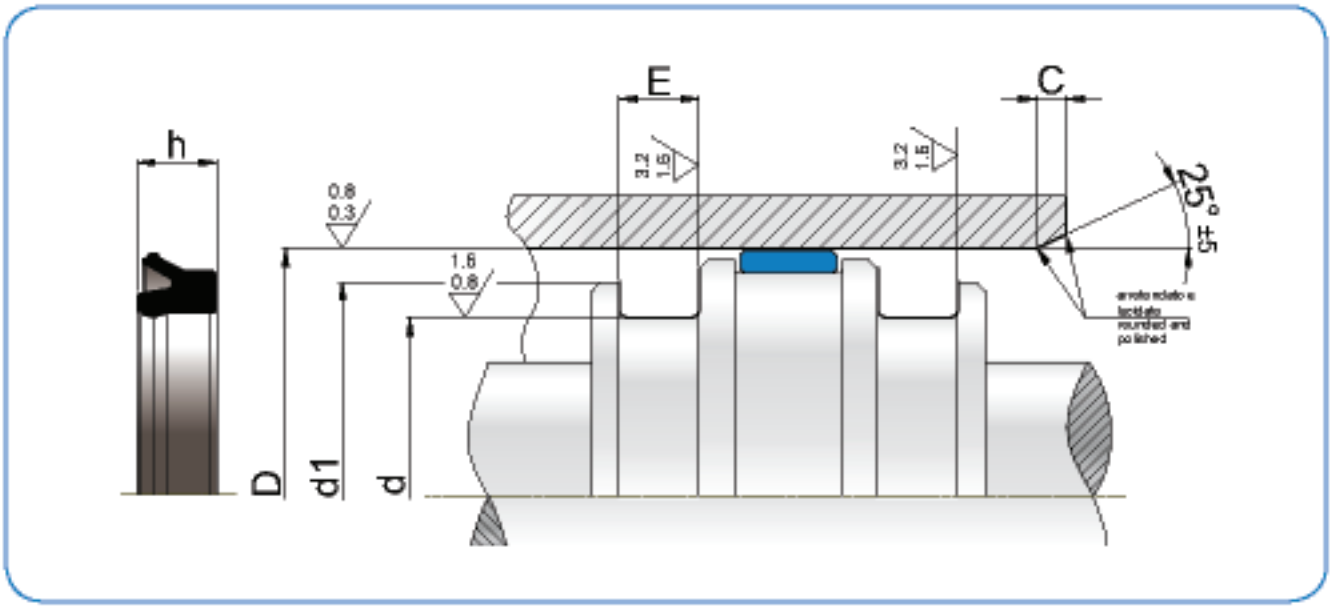

D_{H11}	d_{h10}	Toll h10	d_1*	h	$E_{+0,2}$	ART / ITEM
25	19	0/-0,070	24	3,25	3,50	PSP 0250 0190 032 N0
27	21	0/-0,084	26	3,25	3,50	PSP 0270 0210 032 N0
28	22	0/-0,084	27	3,25	3,50	PSP 0280 0220 032 N0
30	22	0/-0,084	29	3,25	3,50	PSP 0300 0220 032 N0
32	24	0/-0,084	31	3,25	3,50	PSP 0320 0240 032 N0
32	24	0/-0,084	31	5,50	11,00	PSP 0320 0240 055 N0
35	27	0/-0,084	34	3,25	3,50	PSP 0350 0270 032 N0
38	30	0/-0,084	37	3,25	3,50	PSP 0380 0300 032 N0
40	30	0/-0,084	39	7,00	7,50	PSP 0400 0300 070 N0
40	32	0/-0,010	39	3,25	3,50	PSP 0400 0320 032 N0
42	34	0/-0,010	41	3,25	3,50	PSP 0450 0340 032 N0
45	37	0/-0,010	44	3,25	3,50	PSP 0500 0370 032 N0
50	40	0/-0,010	49	7,00	7,50	PSP 0500 0400 070 N0
50	42	0/-0,010	49	3,25	3,50	PSP 0500 0420 032 N0
63	53	0/-0,012	62	4,25	4,50	PSP 0630 0530 042 N0
63	53	0/-0,012	62	7,00	7,50	PSP 0630 0530 070 N0
80	68	0/-0,012	79	8,50	9,50	PSP 0800 0680 085 N0
80	70	0/-0,012	79	4,25	4,50	PSP 0800 0400 042 N0
90	80	0/-0,012	89	4,25	4,50	PSP 0900 0800 042 N0
100	88	0/-0,014	99	8,50	9,50	PSP 1000 0880 085 N0
100	90	0/-0,014	99	4,25	4,50	PSP 1000 0900 042 N0

* diametro di aggancio consigliato ma modificabile in funzione delle esigenze di montaggio

recommended hook diameter which could be modified according to mounting demand



MPS

TENUTA PISTONE MAGNETICO TIPO MPS

Descrizione

La guarnizione tipo MPS è stata studiata sia per pistoni di cilindri pneumatici compatti a corsa bree sia per il semplice e doppio effetto.
L'elemento di guida è sulla guarnizione stessa.
Appositi interstizi e notches creano spazi per trattenere grasso lubrificante mantenendo molto scorrevole il pistone nel tempo.
Il magnete è alloggiato all'interno tra le due guarnizioni contrapposte.
Per problemi o soluzioni alternative, il nostro ufficio tecnico mette a disposizione specifiche progettuali personalizzate.

Limiti d'impiego

Pressione:	< 20 bar
Velocità:	< 1 m/s
Temperatura:	da - 30° C a + 90° C
Fluidi:	aria con o senza lubrificazione, oli e grassi minerali (vedi tabella 1 a pagina 12)

Materiale

Materiale standard poliuretano a 90 Shore A.
Codice materiale standard: B0
Materiale alternativo poliuretano a 85 Shore A.
Codice materiale alternativo: A0

Montaggio

Eliminare tutti gli spigoli vivi e le bave nella sede del pistone per evitare di compromettere la guarnizione
Il montaggio si effettua per accavallamento della guarnizione sul diametro del pistone.
Importante: il pistone deve essere sagomato esattamente come da disegno della tabella dimensionale MPS.

MPS TYPE MAGNETIC PISTON SEAL

Description

The MPS seal has been specifically designed either for pneumatic compact short stroke cylinders and single/double effect cylinders.
The guiding element is integrated on the seal.
Specific notches keep the lubricant grease maintaining a sliding effect on the piston for long time.
The magnet is located between the two opposed gaskets.
For specific needs or problems, our technical offie is at your complete disposal with tailor-made solutions.

Technical data

Pressure:	*< 20 bar*
Speed:	*< 1 m/s*
Temperature:	*from -30° C up to +90° C*
Fluids:	*air with or without lubrication, mineral oils or grease (see table 1, page 12)*

Material

Standard polyurethane 90 Shore A.
Standard compound reference: B0
Alternative polyurethane 85 Shore A.
Alternative compound reference: A0

Assembling

It is important to remove flashes or cutting edges in the housing to avoid damages.
The installation is made by overlapping the seal on the piston diameter.
Warning: the piston must be correctly shaped according to the drawing of the MPS dimensions table.

MPS



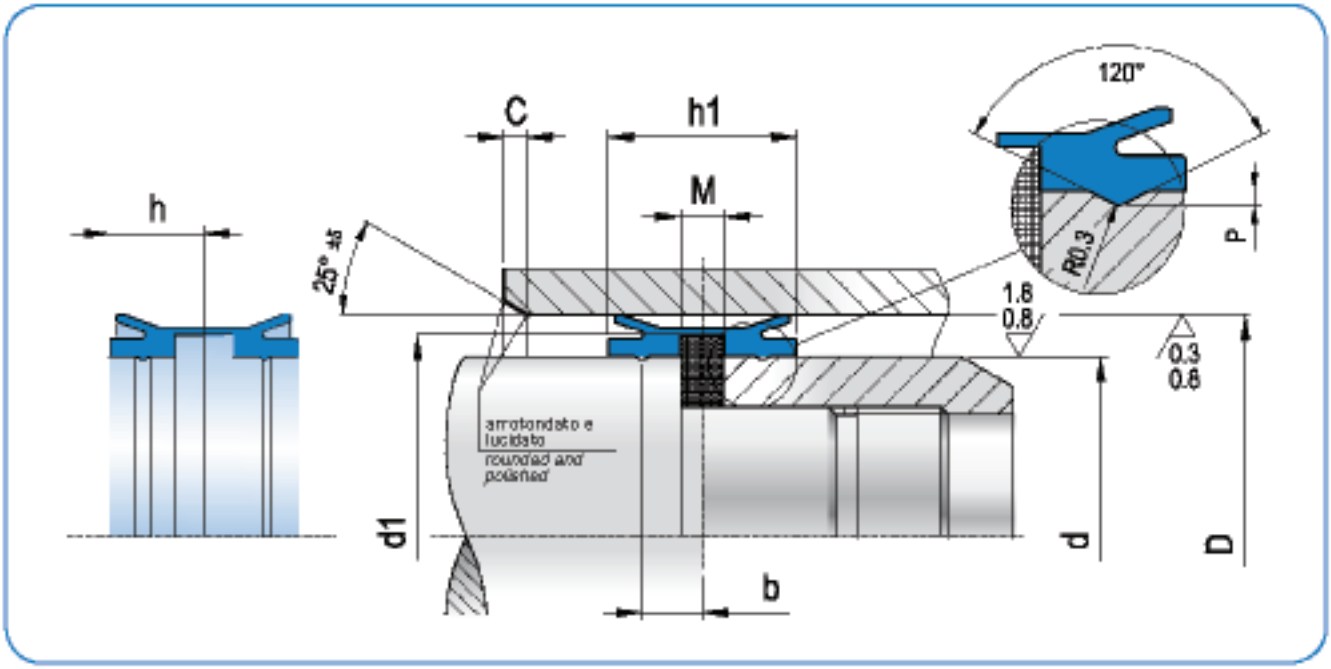

RSP
SRS
SRSN
CSA
PSP
PSPN
MPS
SPS
SPSN
MPP
ISA
ESA
NG
LWA
BWA
BWAN
BWS
BWH
BWHN

D_{H11}	d_{h9}		h_3	h	d_1	M	P	b	ART / *ITEM*
8,0	4,0	0/-0.030	12,0	6,0	6,5	4,0	0,35	4,00	MPS 0080 0040 040 120 B0
10,0	4,0	0/-0.030	12,0	6,0	8,5	3,0	0,35	3,50	MPS 0100 0040 030 120 B0
12,0	6,0	0/-0.030	12,0	6,0	10,5	3,0	0,40	3,50	MPS 0120 0060 030 120 B0
16,0	8,0	0/-0.036	12,0	6,0	14,5	3,0	0,40	3,50	MPS 0160 0080 030 120 B0
20,0	10,0	0/-0.036	12,0	6,0	18,0	3,0	0,50	3,50	MPS 0200 0100 030 120 B0
25,0	10,0	0/-0.036	12,0	6,0	23,0	3,0	0,50	3,50	MPS 0250 0100 030 120 B0

PNEUMATICA
PNEUMATIC



MPS/2

TENUTA PISTONE MAGNETICO TIPO MPS

Descrizione

La guarnizione tipo MPS è stata studiata sia per pistoni di cilindri pneumatici compatti a corsa breve sia per il semplice e doppio effetto.
L'elemento di guida è sulla guarnizione stessa.
Appositi interstizi e notches creano spazi per trattenere grasso lubrificante mantenendo molto scorrevole il pistone nel tempo.
Il magnete è alloggiato all'interno tra le due guarnizioni contrapposte.
Per problemi o soluzioni alternative, il nostro ufficio tecnico mette a disposizione specifiche progettuali personalizzate.

Limiti d'impiego

Pressione: < 20 bar
Velocità: < 1 m/s
Temperatura: da - 30° C a + 90° C
Fluidi: aria con o senza lubrificazione, oli e grassi minerali
(vedi tabella 1 a pagina 12)

Materiale

Materiale standard poliuretano a 90 Shore A.
Codice materiale standard: B0
Materiale alternativo poliuretano a 85 Shore A.
Codice materiale alternativo: A0

Montaggio

Eliminare tutti gli spigoli vivi e le bave nella sede del pistone per evitare di compromettere la guarnizione
Il montaggio si effettua per accavallamento della guarnizione sul diametro del pistone.
Importante: il pistone deve essere sagomato esattamente come da disegno della tabella dimensionale MPS.

MPS TYPE MAGNETIC PISTON SEAL

Description

The MPS seal has been specifically designed either for pneumatic compact short stroke cylinders and single/double effect cylinders.
The guiding element is integrated on the seal.
Specific notches keep the lubricant grease maintaining a sliding effect on the piston for long time.
The magnet is located between the two opposed gaskets.
For specific needs or problems, our technical offie is at your complete disposal with tailor-made solutions.

Technical data

Pressure: *< 20 bar*
Speed: *< 1 m/s*
Temperature: *from -30° C up to +90° C*
Fluids: *air with or without lubrication, mineral oils or grease*
(see table 1, page 12)

Material

Standard polyurethane 90 Shore A.
Standard compound reference: B0
Alternative polyurethane 85 Shore A.
Alternative compound reference: A0

Assembling

It is important to remove flashes or cutting edges in the housing to avoid damages.
The installation is made by overlapping the seal on the piston diameter.
Warning: the piston must be correctly shaped according to the drawing of the MPS dimensions table.



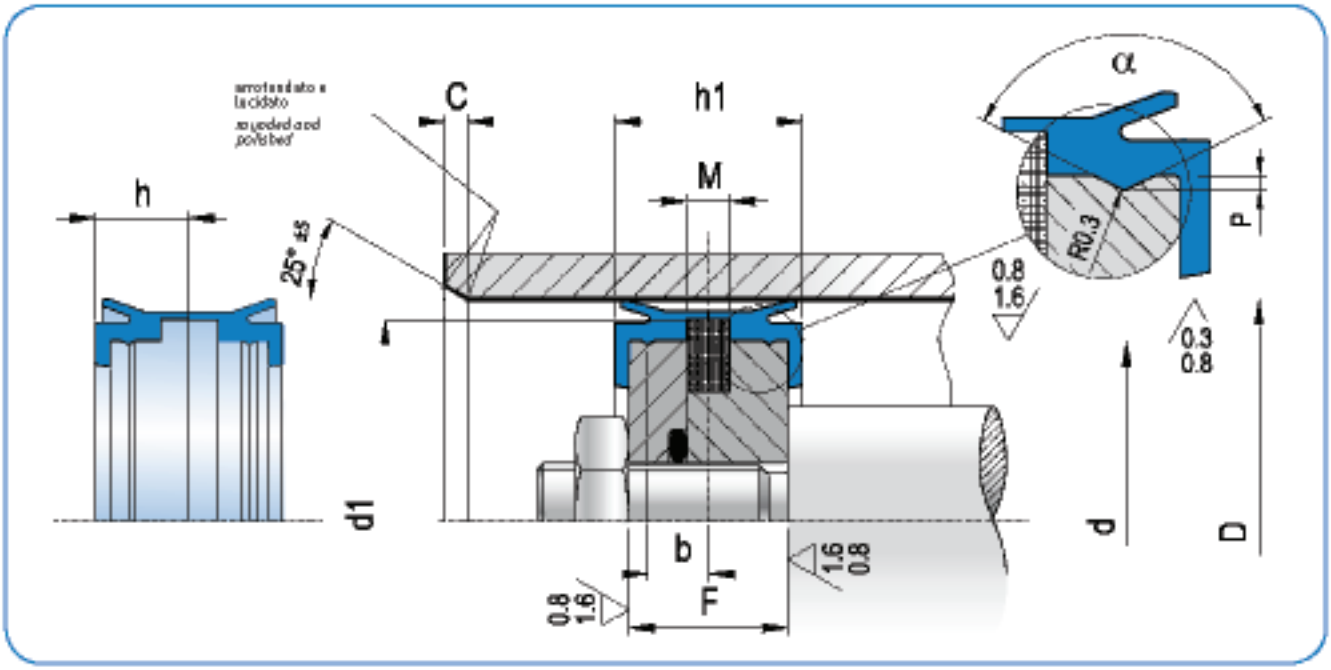

RSP
SRS
SRSN
CSA
PSP
PSPN
MPS
SPS
SPSN
MPP
ISA
ESA
NG
LWA
BWA
BWAN
BWS
BWH
BWHN

D_{H11}	d_{h9}	Toll $_{h9}$	h_1	h	d_3	M	P	b	F	α	ART / *ITEM*
32,0	26,0	0/-0.052	14,0	7,00	29,5	3,0	0,50	4,00	11,00	120°	MPS 0320 0260 030 120 B0
32,0	26,0	0/-0.052	14,0	7,00	29,5	3,0	0,80	4,00	11,00	90°	MPS 0320 0260 030 090 B0
32,0	26,0	0/-0.052	14,0	7,00	29,5	5,0	0,50	4,00	11,00	120°	MPS 0320 0260 050 120 B0
32,0	26,0	0/-0.052	14,0	7,00	29,5	5,0	0,80	4,00	11,00	90°	MPS 0320 0260 050 090 B0
40,0	34,0	0/-0.062	14,5	7,25	37,5	5,0	0,50	4,25	12,00	120°	MPS 0400 0340 050 120 B0
40,0	34,0	0/-0.062	14,5	7,25	37,5	5,0	0,80	4,25	12,00	90°	MPS 0400 0340 050 090 B0
50,0	43,0	0/-0.062	14,5	7,25	46,5	5,0	0,60	4,25	12,00	120°	MPS 0500 0430 050 120 B0
50,0	43,0	0/-0.062	14,5	7,25	46,5	5,0	0,80	4,25	12,00	90°	MPS 0500 0430 050 090 B0
63,0	55,0	0/-0.074	20,0	10,00	59,5	5,0	0,80	6,00	17,00	120°	MPS 0630 0550 050 120 B0
80,0	72,0	0/-0.074	22,0	11,00	76,5	5,0	0,80	6,50	19,00	120°	MPS 0800 0720 050 120 B0
100,0	90,0	0/-0.087	26,0	13,00	96,5	5,0	0,80	7,50	22,00	120°	MPS 1000 0900 050 120 B0



SPS

TENUTA PISTONE A MOLLA TIPO SPS

Descrizione

La guarnizione tipo SPS è realizzata per la tenuta pistone di cilindri pneumatici.
Dove gli ingombri lo permettono, può essere utilizzata anche su valvole pneumatiche.
Le ridotte dimensioni delle sedi consentono un'esecuzione di lavorazione macchina semplice.
Ha un profilo con la tenuta arrotondata al centro sul labbro dinamico e due sporgenze sul labbro statico.
Il profilo simmetrico ne facilita il montaggio.
La particolare forma a molla rende il sistema molto scorrevole anche a bassa pressione.

Limiti d'impiego

Pressione:	< 20 bar
Velocità:	< 1 m/s
Temperatura:	da - 30° C a + 90° C
Fluidi:	aria con o senza lubrificazione, oli e grassi minerali (vedi tabella 1 a pagina 12)

Materiale

Materiale standard poliuretano a 90 Shore A.
Codice materiale standard: B0
Materiale alternativo poliuretano a 85 Shore A.
Codice materiale alternativo: A0

Montaggio

Eliminare tutti gli spigoli vivi e le bave sulla canalizzazione per evitare di compromettere la guarnizione.

SPS TYPE SPRING PISTON SEAL

Description

The SPS rod seal has been designed for pneumatic cylinder applications.
The SPS can also be used for pneumatic valves where allowed by the overall dimensions.
Moreover a shorter machining of the system can be obtained thanks to the reduced overall dimensions.
The profile is rounded in the middle of the dynamic lip and it has two projections on the static lip.
This symmetric shape allows easier installation. The special spring shaped profile ensures high flexibility in the system even at low pressure.

Technical data

Pressure:	*< 20 bar*
Speed:	*< 1 m/s*
Temperature:	*from -30° C up to +90° C*
Fluids:	*air with or without lubrication, mineral oils or grease (see table 1, page 12)*

Material

Standard polyurethane 90 Shore A.
Standard compound reference: B0
Alternative polyurethane 85 Shore A.
Alternative compound reference: A0

Assembling

It is important to remove flashes or cutting edges in the housing to avoid damages.

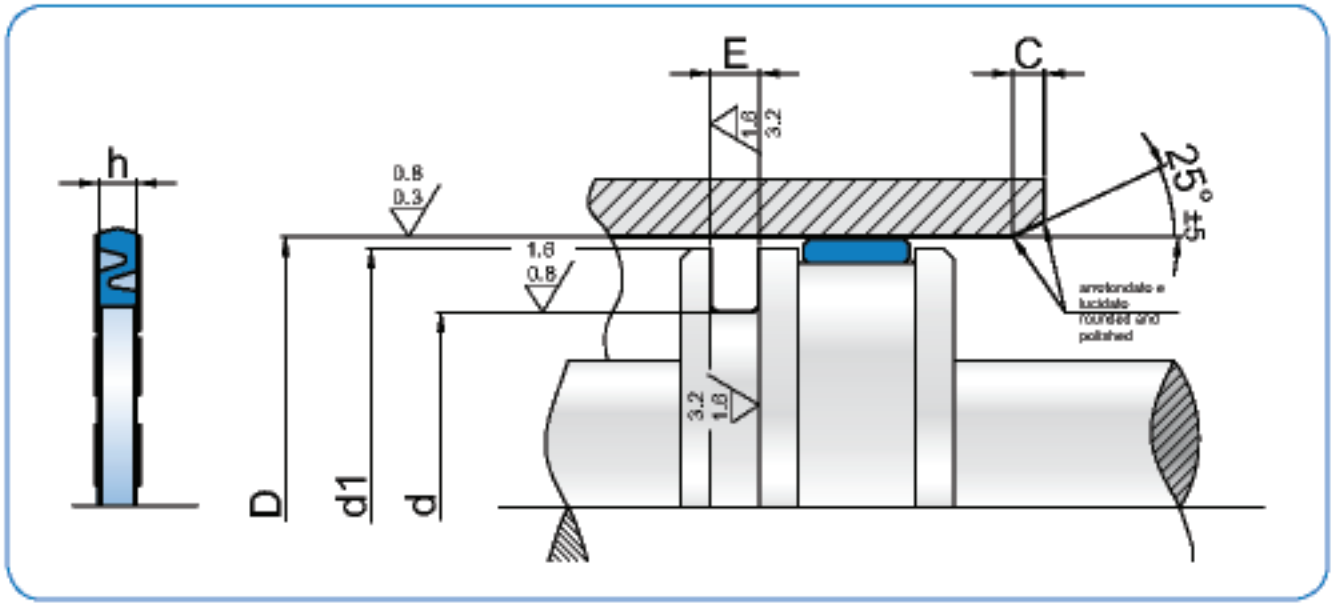

DH11	dh10	toll h10	d1	h	E+0,2	ART / ITEM
12,0	7,0	0/-0.058	11,5	2,2	2,5	SPS 0120 0070 022 B0
16,0	9,0	0/-0.058	15,5	2,4	2,5	SPS 0160 0090 024 B0
20,0	13,0	0/-0.070	19,5	2,4	2,5	SPS 0200 0130 024 B0
25,0	18,0	0/-0.070	24,5	2,4	2,5	SPS 0250 0180 024 B0
28,0	21,0	0/-0.084	27,5	2,4	2,5	SPS 0280 0210 024 B0
30,0	21,0	0/-0.084	29,5	2,9	3,0	SPS 0300 0210 029 B0
32,0	23,0	0/-0.084	31,5	2,9	3,0	SPS 0320 0230 029 B0
35,0	26,0	0/-0.084	34,5	2,9	3,0	SPS 0350 0260 029 B0
40,0	31,0	0/-0.100	39,5	2,9	3,0	SPS 0400 0310 029 B0
45,0	36,0	0/-0.100	44,5	2,9	3,0	SPS 0450 0360 029 B0
50,0	41,0	0/-0.100	49,5	2,9	3,0	SPS 0500 0410 029 B0
60,0	48,0	0/-0.100	59,5	3,9	4,0	SPS 0600 0480 039 B0
63,0	51,0	0/-0.120	62,5	3,9	4,0	SPS 0630 0510 039 B0
70,0	58,0	0/-0.120	69,5	3,9	4,0	SPS 0700 0580 039 B0
80,0	68,0	0/-0.120	79,5	3,9	4,0	SPS 0800 0680 039 B0



SPS/N

TENUTA PISTONE A MOLLA TIPO SPS/N

Descrizione

La guarnizione tipo SPS/N è realizzata per tenuta pistone di cilindri pneumatici.
Dove gli ingombri lo permettono può essere utilizzata anche su valvole pneumatiche.
Le ridotte dimensioni delle sedi,consentono un'esecuzione di lavorazione macchina veloce e semplice.
Il profilo simmetrico ne facilita il montaggio.
La particolare forma a molla rende il sistema molto scorrevole anche a bassissima pressione.

Limiti d'impiego

Pressione:	< 12 [bar]
Velocità:	< 1 [m/s]
Temperatura:	da - 20 °C a +100 °C mescola NBR da -15 °C a +150 °C mescola FKM
Fluidi:	aria lubrificata,grassi e oli minerali (vedi tabella 1 a pagina 12)

Materiale

Il materiale standard è NBR 80 Shore A.
A richiesta materiale FKM 75 Shore A.
Codice materiale standard: N1

Montaggio

Eliminare spigoli vivi e le bave per non danneggiare la tenuta al momento del montaggio

SPS/N TYPE SPRING PISTON SEAL

Description

The seal type SPS / N is a rod seal for pneumatic cylinders.
The SPS/N can also be used for pneumatic valves where allowed by the overall dimensions.
The reduced dimensions of the seat allows fast and simple machining operations.
This symmetric profile allows easier installation The special spring shape ensure a system sliding even a very low pressure.

Technical data

Pressure:	*< 12 [bar]*
Speed:	*< 1 [m/s]]*
Temperature:	*from - 20 °C to +100 °C mescola NBR* *from -15 °C to +150 °C mescola FKM*
Fluids:	*Lubricated air, grease and mineral oils* *(see table 1, page 12)*

Material

Standard material is NBR 70 Shore A.
On demand material FKM 75 Shore A
Standard compound reference: N1

Assembling

It is important to remove flashes or cutting edges in the housing to avoid damages.

SPS/N



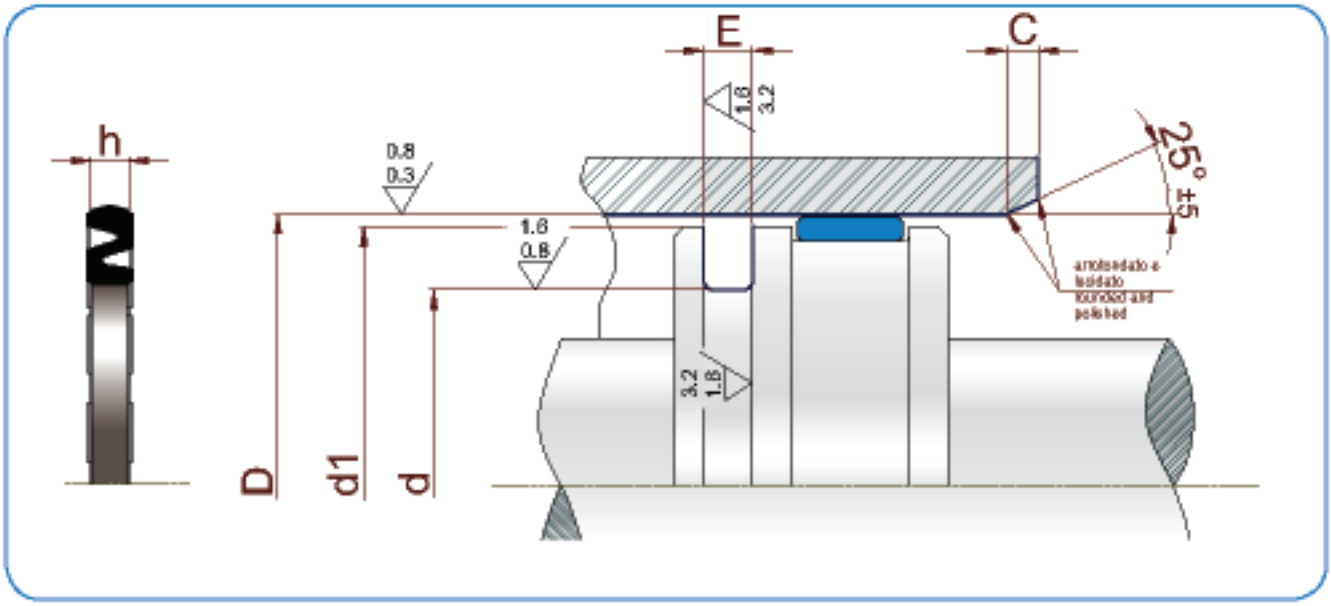

df9	DH10	toll h10	d1	h	E+0,2	ART / ITEM
12,0	7,0	0/-0,058	11,5	2,20	2,50	SPS 0120 0070 022 N1
16,0	9,0	0/-0,058	15,5	2,40	2,50	SPS 0160 0090 024 N1
20,0	13,0	0/-0,070	19,5	2,40	2,50	SPS 0200 0130 024 N1
25,0	18,0	0/-0,070	24,5	2,40	2,50	SPS 0250 0180 024 N1
28,0	21,0	0/-0,084	27,5	2,40	2,50	SPS 0280 0210 024 N1
30,0	21,0	0/-0,084	29,5	2,90	3,00	SPS 0300 0210 029 N1
32,0	23,0	0/-0,084	31,5	2,90	3,00	SPS 0320 0230 029 N1
35,0	26,0	0/-0,084	34,5	2,90	3,00	SPS 0350 0260 029 N1
40,0	31,0	0/-0,100	39,5	2,90	3,00	SPS 0400 0310 029 N1
45,0	36,0	0/-0,100	44,5	2,90	3,00	SPS 0450 0360 029 N1
50,0	41,0	0/-0,100	49,5	2,90	3,00	SPS 0500 0410 029 N1
60,0	48,0	0/-0,100	59,5	3,90	4,00	SPS 0600 0480 039 N1
63,0	51,0	0/-0,120	62,5	3,90	4,00	SPS 0630 0510 039 N1
70,0	58,0	0/-0,120	69,5	3,90	4,00	SPS 0700 0580 039 N1
80,0	68,0	0/-0,120	79,5	3,90	4,00	SPS 0800 0680 039 N1



MPP

PISTONE MONOBLOCCO TIPO MPP

Descrizione

Il pistone monoblocco tipo MPP è realizzato in gomma nitrilica di durezza 75 Shore A vulcanizzata su inserto metallico.
Si usa normalmente in applicazioni pneumatiche nei cilindri a semplice e a doppio effetto. Il profilo a labbri di tenuta arrotondati, facilita lo scorrimento evitando il fenomeno di Stick-Slip. La camera porta lubrificante tra i due labbri di tenuta, garantisce nel tempo la linearità al movimento assiale. I distanziali in senso dello scorrimento, auto-allineano il pistone alla camicia, dove ci fossero carichi radiali forti. Il pistone nella parte interna ha, da entrambi i lati, alcuni bassorilievi che facilitano il primo distacco durante l'inversione di marcia.

Dati tecnici

Pressione: < 20 bar
Velocità: < 1 m/s
Temperatura: da - 30° C a + 100° C
Fluidi: aria (lubrificata e non) , grasso, ecc. (vedi tabella 1 a pagina 12)

Materiale

Il materiale utilizzato è la combinazione di gomma NBR 75 Shore A con inserto acciaio. E' possibile fornire il pistone anche in FKM per impieghi ad alte temperature.

Montaggio

Eliminare spigoli vivi all'imbocco camicia-cilindro per evitare di compromettere la guarnizione.
Ingrassare il pistone prima del montaggio.

1 - distanziale per autoallineamento
2 - mescola in NBR 75 Shore A
3 - gola porta lubrificante
4 - inserto metallico
5 - raggio
6 - logo

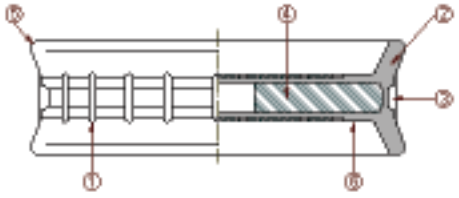

MPP TYPE SPRING PISTON SEAL

Description

The MPP type mono-block piston type MPP is made of NBR nitrile rubber hardness 75 Shore A vulcanized on a metal insert.
It is normally used in pneumatic applications, in single and double effect cylinders. The profile wit rounded edges improves the sliding and avoids Stick-Slip. The groove leads lubricant through the two sealing lips, ensuring the axial movements linearity for long time.
The sliding direction spacers, self-align piston and sleeve in case of heavy radial loads. The piston presents, on both sides of the internal part, some grooves helping breakaway during the first reverse gear.

Technical data

Pressure: < 20 bar
Speed: < 1 m/s
Temperature: from - 30° C up to + 100° C
Fluids: air (lubricated or not), grase, etc. (see table 1, page 12)

Material

The material used is a combination of nitrile rubber NBR 75 Shore A and steel insert.
For high temperature application we could also provide FKM compound instead of NBR compound.

Assembling

Remove sharp edges at the Bore-Cylinder entry to avoid seal damages.
Grease the piston before installation.

1 - aligning spacer
2 - NBR 75 Sh A compound
3 - lubricant groove
4 - metal insert
5 - radius
6 - logo

MPP



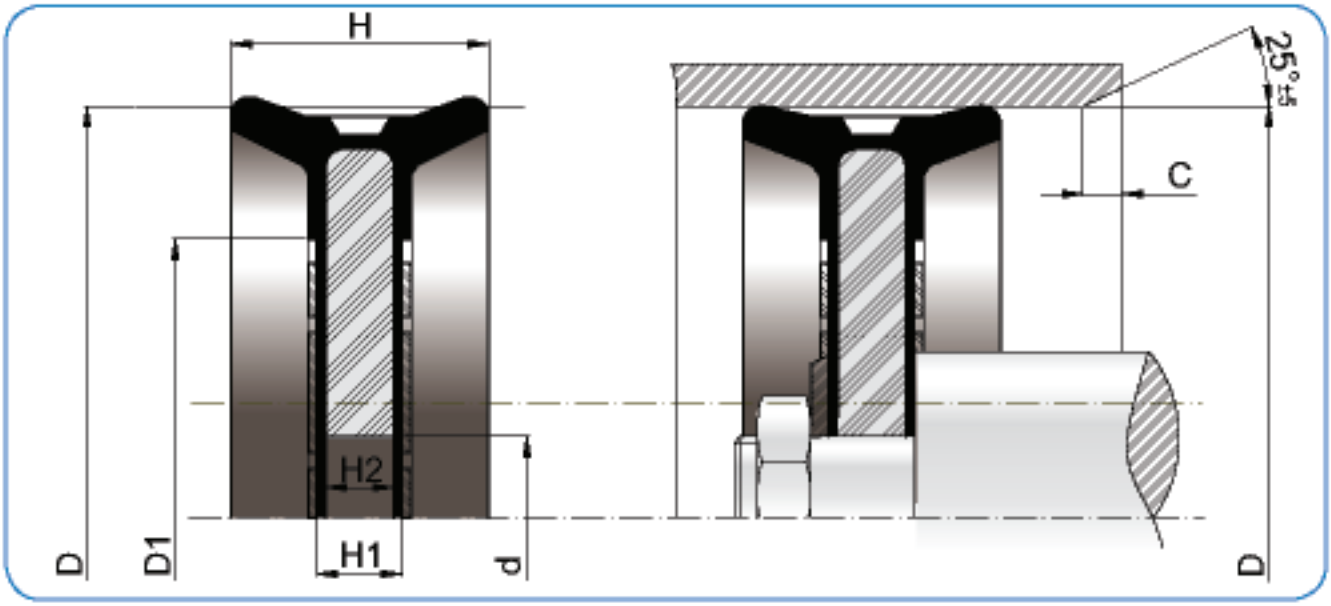

D	d	H	H1	H2	D1	C	ART / ITEM
25,0	8,0	12,0	6,0	4,0	14,50	3,00	MPP 0250 0080 120 N2
32,0	8,0	15,0	6,0	4,0	16,00	3,00	MPP 0320 0080 150 N2
40,0	10,0	18,0	7,0	5,0	23,00	3,00	MPP 0400 0100 180 N2
50,0	10,0	18,0	7,0	5,0	29,00	4,00	MPP 0500 0100 180 N2
60,0	12,0	22,0	9,0	6,0	37,50	4,00	MPP 0600 0120 220 N2
63,0	12,0	22,0	9,0	6,0	40,50	4,00	MPP 0630 0120 220 N2
63,0	14,0	22,0	9,0	6,0	40,50	4,00	MPP 0630 0120 220 N2
63,0	16,0	22,0	9,0	6,0	40,50	4,00	MPP 0630 0140 220 N2
70,0	12,0	22,0	9,0	6,0	47,00	4,00	MPP 0700 0120 220 N2
75,0	12,0	25,0	9,0	6,0	49,00	4,50	MPP 0750 0120 250 N2
80,0	12,0	25,0	9,0	6,0	55,00	4,50	MPP 0800 0120 250 N2
80,0	14,0	25,0	9,0	6,0	55,00	4,50	MPP 0800 0140 250 N2
80,0	16,0	25,0	9,0	6,0	55,00	4,50	MPP 0800 0160 250 N2
80,0	18,0	25,0	9,0	6,0	60,00	4,50	MPP 0800 0160 250 N2
90,0	12,0	25,0	10,0	7,0	65,00	4,50	MPP 0900 0120 250 N2
100,0	18,0	25,0	12,0	9,0	75,00	4,50	MPP 1000 0180 250 N2
100,0	20,0	25,0	12,0	9,0	75,00	4,50	MPP 1000 0200 250 N2
125,0	18,0	30,0	12,0	9,0	90,00	5,00	MPP 1250 0180 300 N2
125,0	20,0	30,0	12,0	9,0	90,00	5,00	MPP 1250 0200 300 N2
160,0	24,0	30,0	14,0	11,0	115,00	6,00	MPP 1600 0240 300 N2
200,0	24,0	30,0	14,0	11,0	150,00	6,00	MPP 2000 0240 300 N2



ISA

FASCE DI GUIDA PER STELO TIPO ISA

Descrizione

Per evitare il contatto diretto tra lo stelo e la testata del cilindro, e tra il pistone e la camicia, che nella maggior parte dei cilindri pneumatici è di alluminio, si inserisce una fascia di guida tipo ISA che serve per tenere guidato tutto il sistema.
Le fasce di guida sono stampate con un materiale auto lubrificante, non abrasivo, studiato appositamente per favorire uno scorrimento lineare.
Il profilo della guida presenta smussi sia all'interno sia all'esterno che facilitano il montaggio dello stelo e del pistone.

Limiti d'impiego

Velocità: < 1 m/s
Temperatura: da - 40° C a + 115° C
Carico statico: fino a 36 N/mm²

Materiale

Resina poliacetalica modificata.
Grazie all'aggiunta di particolari additivi si è realizzato un materiale molto scorrevole e non abrasivo.
Codice materiale standard: R3

Vantaggi

– Ottimo rapporto prezzo/prestazioni
– Basso effetto stick-slip
– Buona resistenza alla compressione

ISA TYPE ROD GUIDE RING

Description

The ISA type rod guide ring is used to avoid direct contact between cylinder head and rod, and between piston and sleeve, since for the main part of the pneumatic cylinders are made of aluminium. It's also used to lead all the system.
The guide rings are in moulded, non-abrasive, self-lubricant material, especially studied to improve the linear sliding.
The profile presents chamfers both sides for easier installation of rod and piston.

Technical data

Speed: < 1 m/s
Temperature: from - 40° C up to + 115° C
Static Strength: up to 36 N/mm²

Material

Non abrasive modified Polyacetalic resin with additives improving the sliding.
Standard compound reference: R3

Advantages

– Excellent price/performance ratio
– Low stick-slip effect
– Good compressive strength

ISA



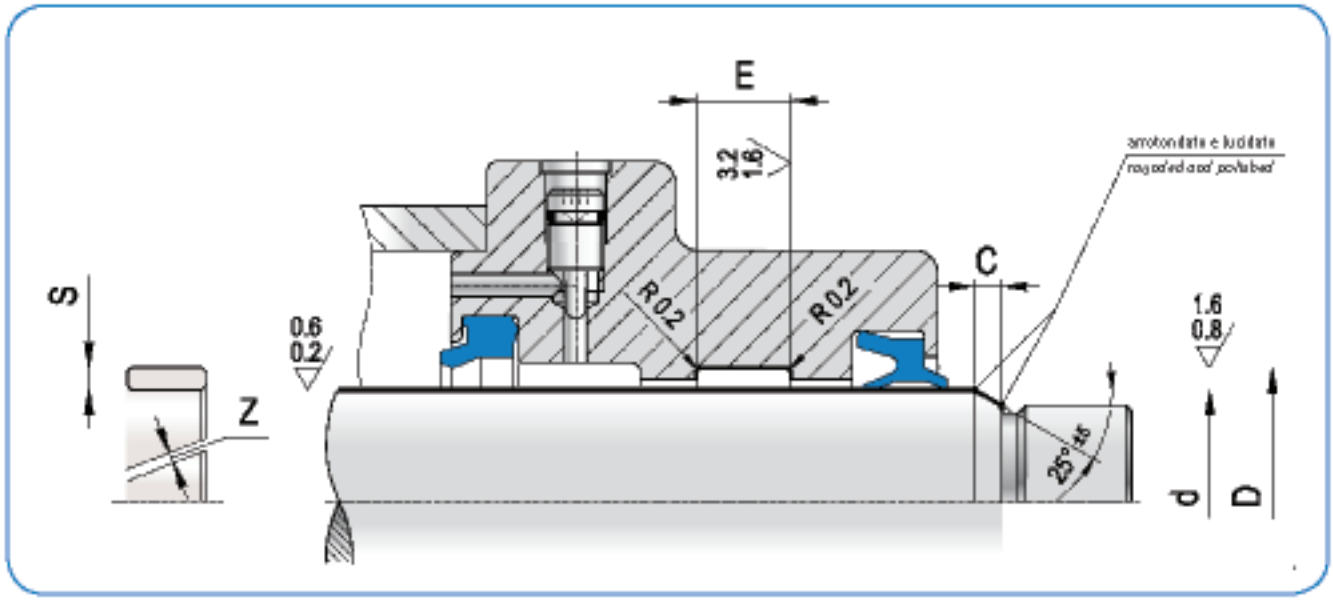

diametri d-D *diameters*	0 - 50	51 - 100	101 - 150	151 - 300
z. mm ≈	2,0	2,5	3,0	3,5

d_{f9}	D_{H7}	toll $_{H7}$	$E_{+0,2}$	$S_{-0,08}$	ART / ITEM
8,0	11,1	+0.018/0	2,5	1,55	ISA 0080 0111 025 R3
10,0	13,1	+0.018/0	2,5	1,55	ISA 0100 0131 025 R3
10,0	13,1	+0.018/0	4,0	1,55	ISA 0100 0131 040 R3
12,0	15,1	+0.018/0	4,0	1,55	ISA 0120 0151 040 R3
12,0	16,0	+0.018/0	9,7	2,00	ISA 0120 0160 097 R3
14,0	17,1	+0.018/0	4,0	1,55	ISA 0140 0171 040 R3
14,0	18,0	+0.018/0	9,7	2,00	ISA 0140 0180 097 R3
15,0	18,1	+0.021/0	4,0	1,55	ISA 0150 0181 040 R3
16,0	19,1	+0.021/0	4,0	1,55	ISA 0160 0191 040 R3
16,0	20,0	+0.021/0	9,7	2,00	ISA 0160 0200 097 R3
18,0	22,0	+0.021/0	9,7	2,00	ISA 0180 0220 097 R3
20,0	23,1	+0.021/0	4,0	1,55	ISA 0200 0231 040 R3
22,0	25,1	+0.021/0	4,0	1,55	ISA 0220 0251 040 R3

d_{f9}	D_{H7}	toll $_{H7}$	$E_{+0,2}$	$S_{-0,08}$	ART / ITEM
25,0	28,1	+0.021/0	4,0	1,55	ISA 0250 0281 040 R3
28,0	31,1	+0.025/0	4,0	1,55	ISA 0280 0311 040 R3
30,0	33,1	+0.025/0	4,0	1,55	ISA 0300 0331 040 R3
32,0	35,1	+0.025/0	4,0	1,55	ISA 0320 0351 040 R3
35,0	38,1	+0.025/0	4,0	1,55	ISA 0350 0381 040 R3
36,0	39,1	+0.025/0	4,0	1,55	ISA 0360 0391 040 R3
40,0	43,1	+0.025/0	4,0	1,55	ISA 0400 0431 040 R3
50,0	53,1	+0.030/0	4,0	1,55	ISA 0500 0531 040 R3



ESA

FASCE DI GUIDA PER PISTONE TIPO ESA

Descrizione

Per evitare il contatto diretto tra lo stelo e la testata del cilindro, e tra il pistone e la camicia, che nella maggior parte dei cilindri pneumatici è di alluminio, si inserisce una fascia di guida tipo ESA che serve per tenere guidato tutto il sistema.
Le fasce di guida sono stampate con un materiale autolubrificante, non abrasivo, studiato appositamente per favorire uno scorrimento lineare.
Il profilo della guida presenta smussi sia all'interno sia all'esterno che facilitano il montaggio dello stelo e del pistone.

Limiti d'impiego

Velocità: < 1 m/s
Temperatura: da - 40° C a + 115° C
Carico statico: fino a 36 N/mm²

Materiale

Resina poliacetalica modificata.
Grazie all'aggiunta di particolari additivi si è realizzato un materiale molto scorrevole e non abrasivo.
Codice materiale standard: R3

Vantaggi

– Ottimo rapporto prezzo/prestazioni
– Basso effetto stick-slip
– Buona resistenza alla compressione

ESA TYPE ROD GUIDE RING

Description

The ESA type rod guide ring is used to avoid direct contact between cylinder head and rod, and between piston and sleeve, since for the main part of the pneumatic cylinders are made of aluminium. It's also used to lead all the system.
The guide rings are in moulded, non-abrasive, self-lubricant material, especially studied to improve the linear sliding.
The profile presents chamfers both sides for easier installation of rod and piston.

Technical data

Speed: < 1 m/s
Temperature: from - 40° C up to + 115° C
Static Strength: up to 36 N/mm²

Material

Non abrasive modified Polyacetalic resin with additives improving the sliding.
Standard compound reference: R3

Advantages

– Excellent price/performance ratio
– Low stick-slip effect
– Good compressive strength

ESA



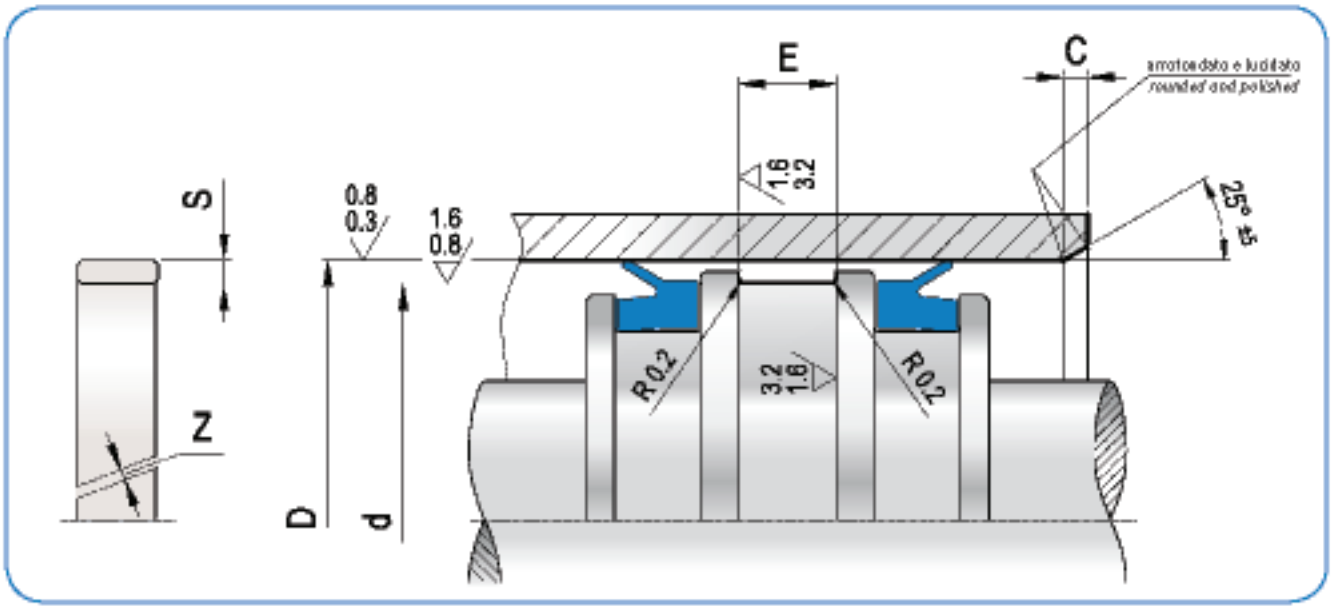

diametri D-d *diameters*	0 - 50	51 - 100	101 - 150	151 - 300
z. mm ≥	2,0	2,5	3,0	3,5

D_{H11}	d_{h7}	toll h7	$E_{+0,2}$	$S_{-0,08}$	ART / *ITEM*
8,0	4,9	0/-0.012	2,5	1,55	ESA 0080 0049 025 R3
10,0	6,9	0/-0.015	2,5	1,55	ESA 0100 0069 025 R3
10,0	6,9	0/-0.015	4,0	1,55	ESA 0100 0069 040 R3
12,0	8,9	0/-0.015	4,0	1,55	ESA 0120 0089 040 R3
14,0	10,9	0/-0.018	4,0	1,55	ESA 0140 0109 040 R3
15,0	11,9	0/-0.018	4,0	1,55	ESA 0150 0119 040 R3
16,0	12,9	0/-0.018	4,0	1,55	ESA 0160 0129 040 R3
16,0	12,0	0/-0.018	9,7	2,00	ESA 0160 0120 097 R3
18,0	14,9	0/-0.018	4,0	1,55	ESA 0180 0149 040 R3
20,0	16,0	0/-0.018	8,2	2,00	ESA 0200 0160 082 R3
20,0	16,0	0/-0.018	9,7	2,00	ESA 0200 0160 097 R3
20,0	16,9	0/-0.018	4,0	1,55	ESA 0200 0169 040 R3
21,0	17,0	0/-0.018	8,2	2,00	ESA 0210 0170 082 R3
22,0	18,0	0/-0.018	9,7	2,00	ESA 0220 0180 097 R3
25,0	21,0	0/-0.021	8,2	2,00	ESA 0250 0210 082 R3
25,0	21,9	0/-0.021	4,0	1,55	ESA 0250 0219 040 R3
26,0	22,0	0/-0.021	8,2	2,00	ESA 0260 0220 082 R3
30,0	25,8	0/-0.021	5,0	2,10	ESA 0300 0258 050 R3
30,0	26,0	0/-0.021	5,0	2,00	ESA 0300 0260 050 R3
30,0	26,0	0/-0.021	8,2	2,00	ESA 0300 0260 082 R3
32,0	26,1	0/-0.021	5,0	2,95	ESA 0320 0261 050 R3
32,0	28,0	0/-0.021	5,0	2,00	ESA 0320 0280 050 R3
32,0	28,0	0/-0.021	8,2	2,00	ESA 0320 0280 082 R3
32,0	28,9	0/-0.021	4,0	1,55	ESA 0320 0289 040 R3

D_{H11}	d_{h7}	toll h7	$E_{+0,2}$	$S_{-0,08}$	ART / *ITEM*
35,0	31,0	0/-0.025	8,2	2,00	ESA 0350 0310 082 R3
40,0	36,0	0/-0.025	5,0	2,00	ESA 0400 0360 050 R3
40,0	36,0	0/-0.025	8,2	2,00	ESA 0400 0360 082 R3
40,0	37,0	0/-0.025	12,0	1,50	ESA 0400 0370 120 R3
45,0	41,0	0/-0.025	10,2	2,00	ESA 0450 0410 102 R3
50,0	46,0	0/-0.025	5,2	2,00	ESA 0500 0460 052 R3
50,0	46,0	0/-0.025	10,2	2,00	ESA 0500 0460 102 R3
50,0	47,0	0/-0.025	12,0	1,50	ESA 0500 0470 120 R3
55,0	51,0	0/-0.030	10,2	2,00	ESA 0550 0510 102 R3
58,0	54,0	0/-0.030	10,2	2,00	ESA 0580 0540 102 R3
60,0	56,0	0/-0.030	10,2	2,00	ESA 0600 0560 102 R3
63,0	59,0	0/-0.030	10,2	2,00	ESA 0630 0590 102 R3
63,0	60,0	0/-0.030	12,0	1,50	ESA 0630 0600 120 R3
65,0	61,0	0/-0.030	10,2	2,00	ESA 0650 0610 102 R3
70,0	66,0	0/-0.030	10,2	2,00	ESA 0700 0660 102 R3
75,0	71,0	0/-0.030	15,2	2,00	ESA 0750 0710 152 R3
80,0	76,0	0/-0.030	10,2	2,00	ESA 0800 0760 102 R3
80,0	76,0	0/-0.030	15,2	2,00	ESA 0800 0760 152 R3
80,0	77,0	0/-0.030	12,0	1,50	ESA 0800 0770 120 R3
85,0	81,0	0/-0.035	15,2	2,00	ESA 0850 0810 152 R3
90,0	86,0	0/-0.035	15,2	2,00	ESA 0900 0860 152 R3
95,0	91,0	0/-0.035	15,2	2,00	ESA 0950 0910 152 R3
100,0	96,0	0/-0.035	10,2	2,00	ESA 1000 0960 102 R3
100,0	96,0	0/-0.035	15,2	2,00	ESA 1000 0960 152 R3



ESA

D_{H11}	d_{h7}	toll $_{h7}$	$E_{+0,2}$	$S_{-0,08}$	ART / *ITEM*
105,0	**101,0**	**0/-0.035**	**20,3**	**2,00**	ESA 1050 1010 203 R3
110,0	**106,0**	**0/-0.035**	**20,3**	**2,00**	ESA 1100 1060 203 R3
115,0	**111,0**	**0/-0.035**	**20,3**	**2,00**	ESA 1150 1110 203 R3
120,0	**116,0**	**0/-0.035**	**20,3**	**2,00**	ESA 1200 1160 203 R3
125,0	**121,0**	**0/-0.040**	**15,2**	**2,00**	ESA 1250 1210 152 R3
125,0	**121,0**	**0/-0.040**	**20,3**	**2,00**	ESA 1250 1210 203 R3
130,0	**126,0**	**0/-0.040**	**20,3**	**2,00**	ESA 1300 1260 203 R3
135,0	**131,0**	**0/-0.040**	**20,3**	**2,00**	ESA 1350 1310 203 R3
140,0	**136,0**	**0/-0.040**	**20,3**	**2,00**	ESA 1400 1360 203 R3
150,0	**146,0**	**0/-0.040**	**25,4**	**2,00**	ESA 1500 1460 254 R3
160,0	**155,0**	**0/-0.040**	**15,0**	**2,50**	ESA 1600 1550 150 R3
160,0	**156,0**	**0/-0.040**	**15,2**	**2,00**	ESA 1600 1560 152 R3

D_{H11}	d_{h7}	toll $_{h7}$	$E_{+0,2}$	$S_{-0,08}$	ART / *ITEM*
180,0	**176,0**	**0/-0.040**	**25,4**	**2,00**	ESA 1800 1760 254 R3
200,0	**195,0**	**0/-0.046**	**15,0**	**2,50**	ESA 2000 1950 150 R3
200,0	**196,0**	**0/-0.046**	**20,3**	**2,00**	ESA 2000 1960 203 R3
200,0	**196,0**	**0/-0.046**	**25,4**	**2,00**	ESA 2000 1960 254 R3
220,0	**216,0**	**0/-0.046**	**30,5**	**2,00**	ESA 2200 2160 305 R3
250,0	**245,0**	**0/-0.046**	**20,0**	**2,50**	ESA 2500 2450 200 R3
250,0	**246,0**	**0/-0.046**	**20,3**	**2,00**	ESA 2500 2460 203 R3
250,0	**246,0**	**0/-0.046**	**30,5**	**2,00**	ESA 2500 2460 305 R3

Nota: altre dimensioni non a catalogo a richiestaConsultare il nostro ufficio tecnico.

Remark: please contact our technical dept. for fulfter dimensions not included in the catalogue.

ESA





NG

NASTRO GUIDA IN PTFE TIPO NG

Descrizione

Il nastro guida NG in politetrafluoroetilene caricato carbografite viene fornito in rotoli dai quali si psso ricavare guide che possono essere intercambiabili con quelle in materiale termoplastico. Vengono applicate sia su stelo che su pistone.
Hanno come caratteristiche principali, la precisione dello spessore e la quasi assenza di attrito; per la sua inerzia chimica,sono compatibili con molti fluidi.
Possono essere con o senza smussi di invito.

Limiti d'impiego

Velocità: <15 m/s
Temperatura: da -50°C a +160°C con punte a 200°C
Fluidi: molti fluidi essendo un materiale con inerzia chimica elevata
(vedi tabella 1 a pagina 12)

Materiale

Il materiale è un politetrafluoroetilene (PTFE) con caricato carbografite
Codice materiale: TC LCG3030

NG TYPE PTFE WEAR TAPE

Description

NG carbon-graphite filled Polytetrafluoroethylene tape is supplied in rolls.
By cutting them is possible to obtain interchangeable guides to replace thermoplastic material.
They can be used for rods or pistons.
Thanks to the properties (thickness accuracy, low friction and chemical resistance) are compatible with many fluids.
They can be with or without chamfers.

Technical data

Speed: *< 15 m/s*
Temperature: *from -50°C to +160°Ct peaks till 200°C.*
Fluidi: *many fluids as a material with high chemical inertia*
(see table 1, page 12)

Material

The material is carbon-graphite filled polytetrafluoroethylene (PTFE).
Compound reference: TC LCG3030

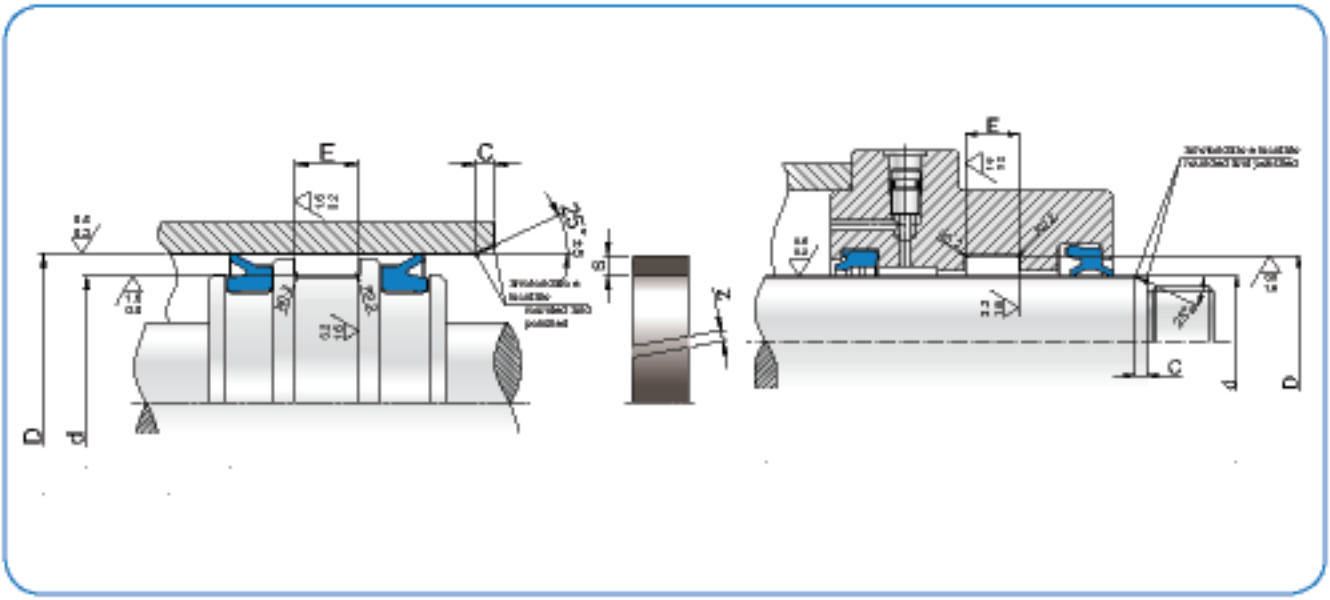

Dimensione sede - *Groove dimension*				
d_{h9}	D_{H9}	$E_{+0.2}$	Spessore anello *Ring thickness* s	z
8-20	d +2s	3,20	1,50	1,0-2,0
15-35	d +2s	4,20	1,50 2,00	1,0-2,0
15-75	d +2s	5,60	1,50 2,00 2,50	1,5-3,5
20-75	d +2s	6,30	1,50 2,00 2,50	1,5-3,5
30-250	d +2s	8,10	1,50 2,00 2,50	2,0-5,0
35-300	d +2s	9,70	1,50 2,00 2,50 3,00	2,0-6,0
120-400	d +2s	15,00	1,50 2,00 2,50 3,00	4,0-8,0
200-900	d +2s	20,00	1,50 2,00 2,50 3,00	4,5-8,0
300-900	d +2s	25,00	2,00 2,50 3,00	6,0-8,0
300-900	d +2s	30,00	2,00 2,50 3,00	6,0-10,0



LWA

RASCHIATORE LEGGERO TIPO LWA

Descrizione

Il raschiatore leggero tipo LWA è studiato per tener pulite le bussole a sfera nelle unità di guida.
Questo raschiatore è a contatto con alberi cementati o rettificati nella parte interna.
Alloggia nella parte esterna sul diametro della bussola e l'aggancio viene garantito da una gola (tipo quella di un seeger per esterno) dove viene inserito il gradino del raschiatore.
La lavorazione meccanica di facile esecuzione ed il minimo ingombro del raschiatore ha ampliato il campo di applicazioni anche in quello dei cilindri pneumatici.
Il labbro molto flessibile del raschiatore non pregiudica la scorrevolezza dell'unità di guida.

Limiti d'impiego

Velocità: < 4 m/s
Temperatura: da - 30° C a + 90° C

Materiale

Il materiale utilizzato è un poliuretano che resiste molto bene all'usura e benissimo alle basse temperature mantenendosi sempre flessibile.
Materiale standard poliuretano a 90 Shore A.
Codice materiale standard: B0

Montaggio

Eliminare tutti gli spigoli vivi e le bave nell'alloggiamento del raschiatore.
Si consiglia di ingrassare il sistema.

LWA TYPE LIGHT WIPER

Description

The LWA type light wiper is designed for the ball-bushings cleaning in the guide systems.
The internal part is in contact with hardened or ground shafts.
The external part is located the outside diameter of the bushing and the hanging is ensured by a groove (similar to a circlip for external use) where the wiper step is inserted.
The field of applications has been enlarged to the pneumatic cylinders thanks to the very simple mechanical execution and the reduced overall dimensions.
The highly flexible wiper lip does not interfere with the sliding of the guide system.

Technical data

Speed: < 4 m/s
Temperature: from - 30° C up to + 90° C

Material

Our polyurethane is very resistant to wear and is excellent at low temperature due to its high flexibility. Standard polyurethane 90 Shore A.
Standard compound reference: B0

Assembling

Remove cutting edges and flashes in the scraper housing.
We recommend greasing the system.

LWA



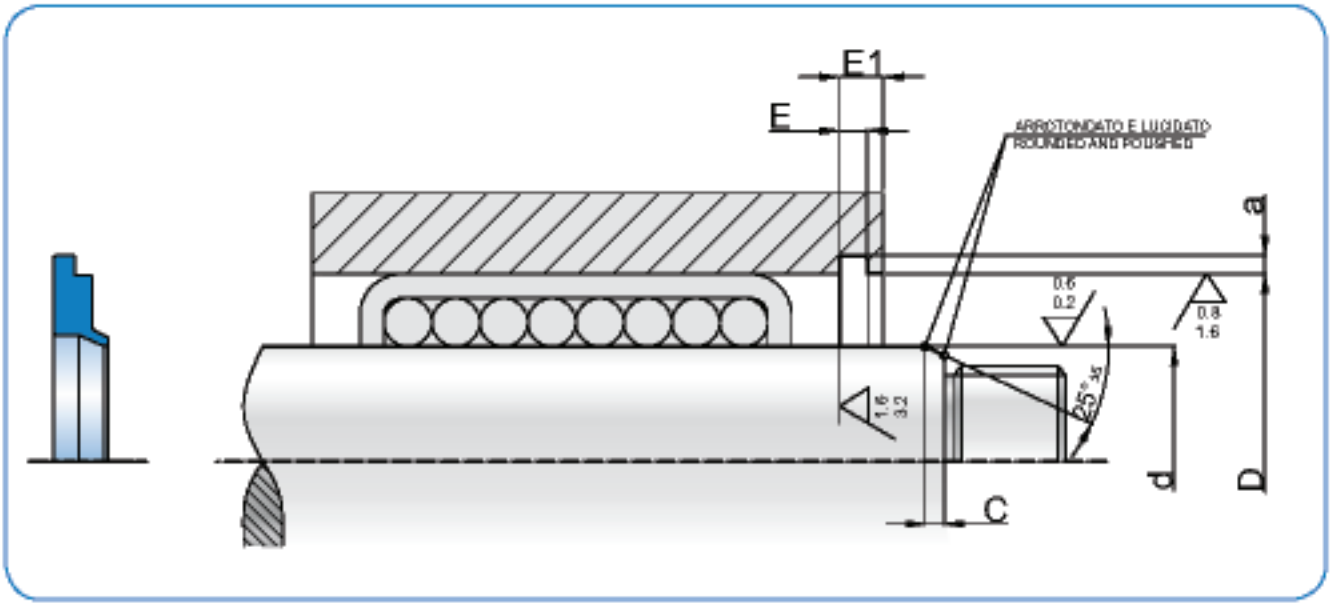

d_{f9}	D_{H11}	toll $_{H11}$	h	E_3	a	E	ART / ITEM
6,0	12,0	+0.110/-0	4,5	3,0	1,3	1,6	LWA 0060 0120 045 B0
8,0	15,0	+0.110/-0	4,5	3,0	1,3	1,6	LWA 0080 0150 045 B0
10,0	17,0	+0.110/-0	4,5	3,0	1,3	1,6	LWA 0100 0170 045 B0
12,0	19,0	+0.130/-0	4,5	3,0	1,3	1,6	LWA 0120 0190 045 B0
14,0	21,0	+0.130/-0	4,5	3,0	1,3	1,6	LWA 0140 0210 045 B0
16,0	24,0	+0.130/-0	4,5	3,0	1,3	1,6	LWA 0160 0240 045 B0
20,0	28,0	+0.130/-0	4,5	3,0	1,3	1,6	LWA 0200 0280 045 B0
25,0	35,0	+0.160/-0	4,5	3,0	1,5	1,6	LWA 0250 0350 045 B0
30,0	40,0	+0.160/-0	4,5	3,0	2,0	1,6	LWA 0300 0400 045 B0
40,0	52,0	+0.190/-0	4,5	3,0	2,0	1,6	LWA 0400 0520 045 B0
50,0	62,0	+0.190/-0	4,5	3,0	2,0	1,6	LWA 0500 0620 045 B0

Nota: altre dimensioni non a catalogo a richiesta. Consultare il nostro ufficio tecnico.

Remark: please contact our technical dept. for further dimensions not included in the catalogue.



BWA

RASCHIATORE BIDIREZIONALE TIPO BWA

Descrizione

L'elemento di tenuta tipo BWA ha il profilo di una guarnizione a labbri asimmetrici combinato con un raschiatore.
Alloggiato in un'unica sede, presenta numerosi vantaggi:
– ingombri ridotti;
– minor tempo di esecuzione della sede.

Limiti d'impiego

Pressione: < 20 bar
Velocità: < 1 m/s
Temperatura: da - 30° C a + 90° C
Fluidi: aria con o senza lubrificazione, oli e grassi minerali
(vedi tabella 1 a pagina 12)

Materiale

Materiale standard poliuretano a 90 Shore A.
Codice materiale standard: B0
Materiale alternativo poliuretano a 85 Shore A.
Codice materiale alternativo: A0

Montaggio

La sede dove va alloggiato il raschiatore non deve presentare spigoli vivi o bave che compromettano in esercizio la durata dello stesso.

BWA TYPE BI-DIRECTIONAL WIPER

Description

The BWA sealing part combines an asymmetric lip seal profile with a wiper.
Since it is installed in a single groove, the BWA seal has several advantages:
– reduced overall dimensions;
– faster construction of the groove.

Technical data

Pressure: < 20 bar
Speed: < 1 m/s
Temperature: from – 30° C up to + 90° C
Fluids: air with or without lubrication, mineral oils or grease
(see table 1, page 12)

Material

Standard polyurethane 90 Shore A.
Standard compound reference: B0
Alternative polyurethane 85 Shore A.
Alternative compound reference: A0

Assembling

Remove cutting edges and/or flashes from the housing where the wiper has to be installed in order to minimise seal wear during operation.

BWA



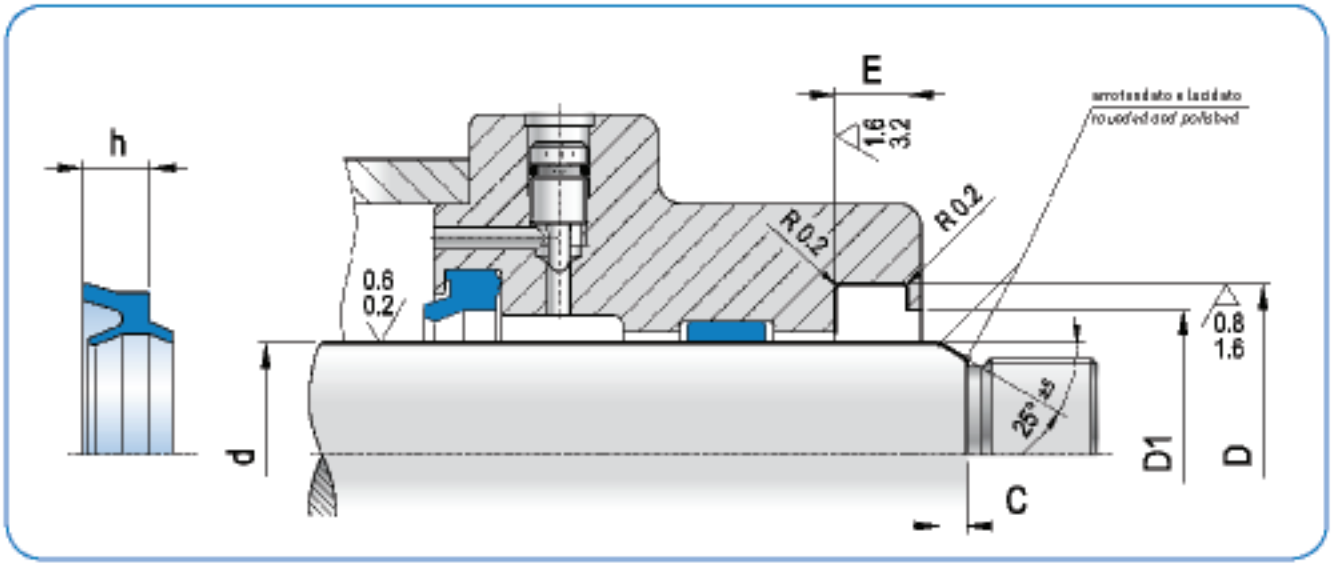

d_{f9}	D_{H10}	Toll H10	D_1	h	$E_{+0,2}$	ART / ITEM
3,0	8,8	+0.058/0	5,0	4,0	4,5	BWA 0030 0088 040 B0
4,0	7,0	+0.058/0	6,0	2,2	2,7	BWA 0040 0070 022 B0
4,0	8,8	+0.058/0	5,A	4,0	4,5	BWA 0040 0088 040 B0
5,0	8,0	+0.058/0	6,2	2,2	2,7	BWA 0050 0080 022 B0
6,0	9,0	+0.070/0	7,2	2,2	2,7	BWA 0060 0090 022 B0
6,0	10,8	+0.070/0	8,0	4,0	4,5	BWA 0060 0108 040 B0
8,0	11,5	+0.070/0	9,2	2,5	3,0	BWA 0080 0115 025 B0
8,0	12,8	+0.070/0	10,0	4,0	4,5	BWA 0080 0128 040 B0
8,0	14,0	+0.070/0	11,0	4,0	4,5	BWA 0080 0140 040 B0
10,0	14,0	+0.070/0	11,A	2,8	3,2	BWA 0100 0140 028 B0
10,0	16,0	+0.070/0	12,5	3,6	4,0	BWA 0100 0160 036 B0
10,0	16,8	+0.070/0	13,0	4,0	4,5	BWA 0100 0168 040 B0
10,0	18,0	+0.070/0	14,0	4,5	5,0	BWA 0100 0180 045 B0
12,0	16,5	+0.070/0	13,7	3,2	3,7	BWA 0120 0165 032 B0
12,0	18,0	+0.070/0	14,5	3,6	4,0	BWA 0120 0180 036 B0
12,0	20,0	+0.084/0	16,0	3,2	3,7	BWA 0120 0200 032 B0
12,0	20,0	+0.084/0	16,0	4,5	5,0	BWA 0120 0200 045 B0
12,0	20,0	+0.084/0	16,0	5,0	5,5	BWA 0120 0200 050 B0
12,0	22,0	+0.084/0	16,0	5,0	6,0	BWA 0120 0220 050 B0
14,0	18,5	+0.084/0	15,7	3,2	3,7	BWA 0140 0185 032 B0
14,0	20,0	+0.084/0	16,5	3,6	4,0	BWA 0140 0200 036 B0
14,0	22,0	+0.084/0	18,0	4,5	5,0	BWA 0140 0220 045 B0
14,0	24,0	+0.084/0	18,0	5,0	6,0	BWA 0140 0240 050 B0
16,0	20,5	+0.084/0	17,7	3,2	3,7	BWA 0160 0205 032 B0
16,0	22,0	+0.084/0	18,5	3,6	4,0	BWA 0160 0220 036 B0
16,0	24,0	+0.084/0	18,5	4,5	5,0	BWA 0160 0240 045 B0
16,0	26,0	+0.084/0	20,0	5,0	6,0	BWA 0160 0260 050 B0
18,0	22,5	+0.084/0	19,7	3,2	3,7	BWA 0180 0225 032 B0
18,0	24,0	+0.084/0	20,5	3,6	4,0	BWA 0180 0240 036 B0
18,0	26,0	+0.084/0	21,0	4,5	5,0	BWA 0180 0260 045 B0

d_{f9}	D_{H10}	Toll H10	D_1	h	$E_{+0,2}$	ART / ITEM
18,0	28,0	+0.084/0	22,0	5,0	6,0	BWA 0180 0280 050 B0
20,0	25,0	+0.084/0	21,9	3,6	4,0	BWA 0200 0250 036 B0
20,0	26,0	+0.084/0	22,5	3,6	4,0	BWA 0200 0260 036 B0
20,0	30,0	+0.084/0	24,0	6,0	7,0	BWA 0200 0300 060 B0
22,0	27,0	+0.084/0	23,9	3,6	4,0	BWA 0220 0270 036 B0
22,0	28,0	+0.084/0	24,5	3,6	4,0	BWA 0220 0280 036 B0
22,0	32,0	+0.084/0	26,0	6,0	7,0	BWA 0220 0320 060 B0
25,0	30,0	+0.084/0	26,9	3,6	4,0	BWA 0250 0300 036 B0
25,0	31,0	+0.100/0	27,5	3,6	4,0	BWA 0250 0310 036 B0
25,0	35,0	+0.100/0	29,0	6,0	7,0	BWA 0250 0350 060 B0
28,0	38,0	+0.100/0	32,0	6,0	7,0	BWA 0280 0380 060 B0
30,0	35,5	+0.100/0	32,1	3,9	4,5	BWA 0300 0355 039 B0
30,0	38,0	+0.100/0	33,0	4,5	5,0	BWA 0300 0380 045 B0
30,0	40,0	+0.100/0	34,0	6,0	7,0	BWA 0300 0400 060 B0
32,0	37,5	+0.100/0	34,1	3,9	4,5	BWA 0320 0375 039 B0
32,0	40,0	+0.100/0	35,0	4,5	5,0	BWA 0320 0400 045 B0
32,0	42,0	+0.100/0	36,0	6,0	7,0	BWA 0320 0420 060 B0
35,0	45,0	+0.100/0	39,0	6,0	7,0	BWA 0350 0450 060 B0
36,0	44,0	+0.100/0	39,0	4,5	5,0	BWA 0360 0440 045 B0
36,0	46,0	+0.100/0	40,0	6,0	7,0	BWA 0360 0460 060 B0
40,0	46,0	+0.100/0	43,0	4,3	4,8	BWA 0400 0460 043 B0
40,0	50,0	+0.100/0	44,0	6,0	7,0	BWA 0400 0500 060 B0
45,0	53,0	+0.120/0	48,0	4,5	5,0	BWA 0450 0530 045 B0
45,0	55,0	+0.120/0	49,0	6,0	7,0	BWA 0450 0550 060 B0
50,0	62,0	+0.120/0	55,0	7,5	8,5	BWA 0500 0620 075 B0

Nota: altre dimensioni non a catalogo a richiesta. Consultare il nostro ufficio tecnico.

Remark: please contact our technical dept. for further dimensions not included in the catalogue.



BWA/N

RASCHIATORE BIDIREZIONALE TIPO BWA/N

Descrizione

La tenuta BWA/N per tenuta stelo con raschiatore è fatta in NBR 80 Shore A.
Creata per sopperire a delle lavorazioni in sede non in tolleranza di rugosità.
Presenta sul labbro dinamico un raggio che permette di scorrere a bassissima pressione.
Ha un labbro raschiante che trattiene le impurità esterne.
Sul labbro statico sono stati creati dei notches che servono da stabilizzatori alla guarnizione nel caso ci fossero delle inversioni veloci di direzione, per inerzia.

Dati tecnici

Pressione: < 20 bar
Velocità: < 1,2 m/s
Temperatura: da - 30° C a + 100° C
Fluidi: aria lubrificata
(vedi tabella 1 a pagina 12)

Materiale

Mescola in NBR 80 Shore A.
E' possibile fornire, per impieghi diversi, mescole in HNBR, EPDM, FKM e VMQ.

Montaggio

Eliminare sporgenze e spigoli taglienti sulla testata per evitare durante il montaggio, il danneggiamento della tenuta.
E' buona norma ingrassare la guarnizione sul pistone prima del montaggio.

1 - distanziali stabilizzatore
2 - raggio
3 - raggio <=0,1 (mm)

BWA/N TYPE BI-DIRECTIONAL WIPER

Description

The BWA/N rod seal with wiper is made of NBR 80 Shore A compound has been developed to operate where the machining tolerances of the seat aren't in the correct range of roughness tolerance.
The dynamic lip presents a radius allowing to slide at very low pressure.
The seal has also a scraping lip stopping the outside impurities.
The static lip includes some notches acting as seal stabilizers in case of quick inertial direction changes.

Technical data

Pressure: < 20 bar
Speed: < 1,2 m/s
Temperature: from - 30° C up to + 100° C
Fluids: lubricated air
(see table 1, page 12)

Material

Standard material is a compound NBR 80 Shore A.
For different applications, HNBR, EPDM, FKM and VMQ compounds can be also supplied.

Assembling

Remove sharp edges and protrusions on the cylinder head to avoid damages of the seal during the assembling. Grease the seal on the piston before fitting.

1 - stabilisers
2 - radius
3 - radius <=0,1 (mm)

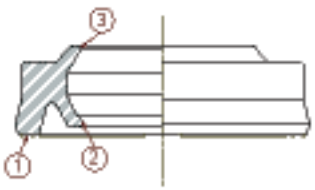

BWA/N



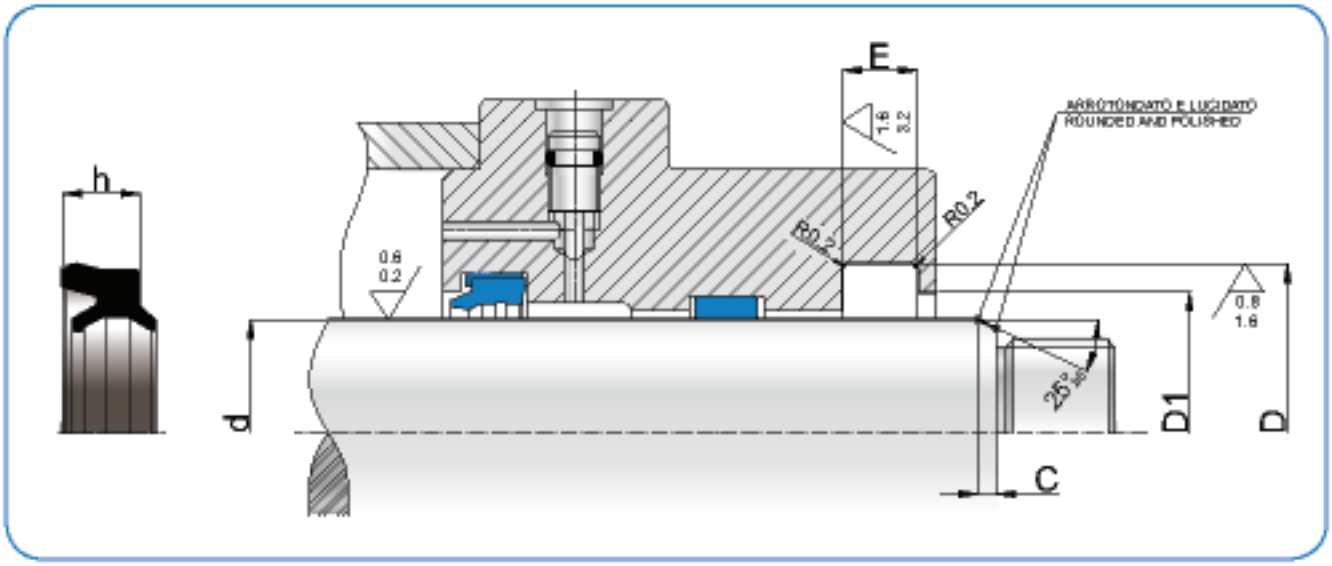

d_{f9}	D_{H10}	Toll h10	D_1	h	$E_{+0,2}$	ART / *ITEM*
6	10,8	0/-0,070	8	4	4,5	BWA 0060 0108 032 N1
8	12,8	0/-0,070	10	4	4,5	BWA 0080 0128 032 N1
10	16,8	0/-0,070	13	4	4,5	BWA 0100 0168 032 N1
10	18,0	0/-0,070	14	4,5	5	BWA 0100 0180 032 N1
12	20,0	0/-0,084	16	4,5	5	BWA 0120 0200 032 N1
12	22,0	0/-0,084	16	5	6	BWA 0120 0220 055 N1
14	22,0	0/-0,084	18	4,5	5	BWA 0140 0220 032 N1
14	24,0	0/-0,084	18	5	6	BWA 0140 0240 032 N1
16	24,0	0/-0,084	18,5	4,5	5	BWA 0160 0240 070 N1
16	26,0	0/-0,084	20	5	6	BWA 0160 0260 032 N1
18	26,0	0/-0,084	21	4,5	5	BWA 0180 0260 032 N1
18	28,0	0/-0,084	22	5	6	BWA 0180 0280 032 N1
20	30,0	0/-0,084	24	6	7	BWA 0200 0300 070 N1
22	32,0	0/-0,084	26	6	7	BWA 0220 0320 032 N1
25	35,0	0/-0,010	29	6	7	BWA 0250 0350 042 N1
30	40,0	0/-0,010	34	6	7	BWA 0300 0400 070 N1
40	50,0	0/-0,010	44	6	7	BWA 0400 0500 085 N1



BWS

RASCHIATORE BIDIREZIONALE CON GRADINO TIPO BWS

Descrizione

Il raschiatore tipo BWS è ottenuto dalla combinazione di una guarnizione a labbri asimmetrici ed un raschiatore.
Presenta sul labbro di tenuta una raggiatura che lo rende molto scorrevole ed ha sul lato statico un gradino ridotto che ne facilita il montaggio soprattutto per diametri piccoli.
La parte raschiante ha un labbro molto sottile per non influenzare il primo distacco nel movimento del cilindro.

Limiti d'impiego

Pressione: < 20 bar
Velocità: < 1 m/s
Temperatura: da - 30° C a + 90° C
Fluidi: aria con o senza lubrificazione, oli e grassi minerali
(vedi tabella 1 a pagina 12)

Materiale

Materiale standard poliuretano a 90 Shore A.
Codice materiale standard: B0
Materiale alternativo poliuretano a 85 Shore A.
Codice materiale alternativo: A0

Montaggio

La sede dove va alloggiato il raschiatore non deve presentare spigoli vivi o bave che compromettano in esercizio la durata dello stesso.

Attenzione: per impieghi gravosi dove sono presenti disallineamenti o fuori centro, con diametri di stelo superiori a ø 16 mm è consigliato un montaggio in sede non più agganciato con il solo gradino ma con tutta la base del raschiatore.

BWS TYPE BI-DIRECTIONAL WIPER WITH STEP

Description

The BWS wiper combines an asymmetric lip seal profile with a wiper.
On the sealing lip the BWS has a radius allowing greater smoothness and on the static side the reduced size step facilitates installation, especially for small diameters.
The scraping part has a very thin lip so as not to influence the stick-slip effect in the cylinder movement.

Technical data

Pressure: *< 20 bar*
Speed: *< 1 m/s*
Temperature: *from – 30° C up to + 90° C*
Fluids: *air with or without lubrication, mineral oils or grease*
(see table 1, page 12)

Material

Standard polyurethane 90 Shore A.
Standard compound reference: B0
Alternative polyurethane 85 Shore A.
Alternative compound reference: A0

Assembling

Remove cutting edges and/or flashes from the housing where the wiper has to be installed in order to minimise seal wear during operation.

Warning: for heavy duty applications showing misalignments or imbalance and with diameters bigger than ø 16 mm, it's recommend to hang the base of the wiper to the housing and not only to the step.

BWS



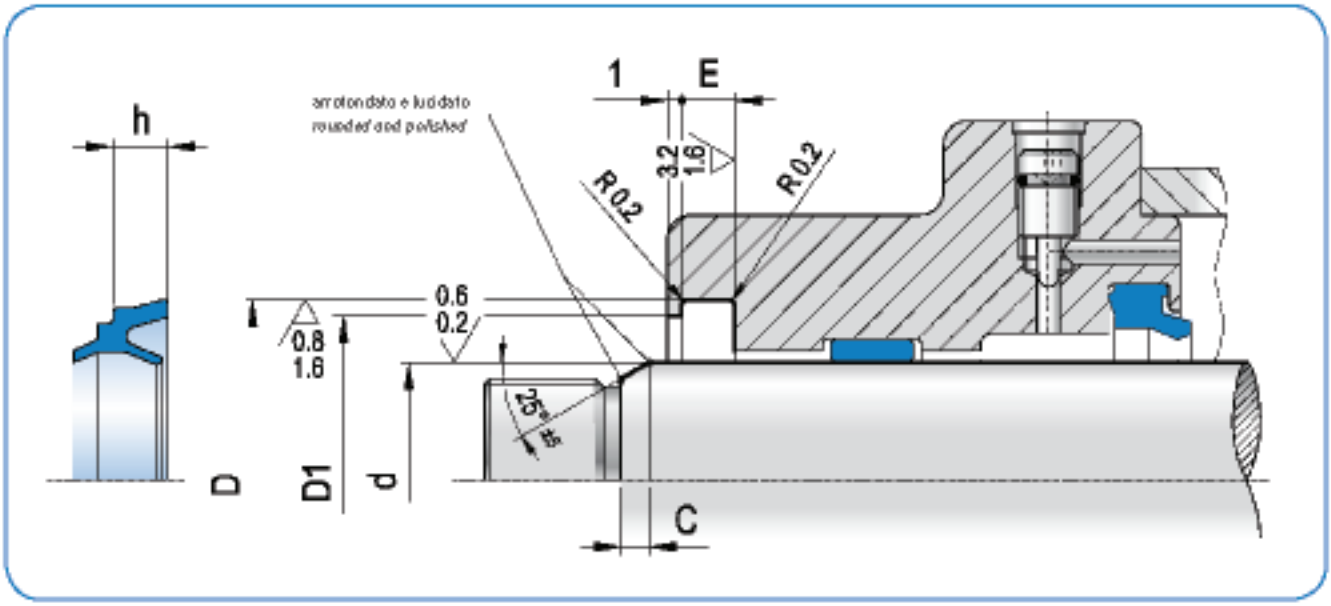

d_{f9}	D_{H10}	toll $_{H10}$	D_1	h	$E_{+0,2}$	ART / *ITEM*
4,0	8,1	+0.058/0	6,70	2,8	3,0	BWS 0040 0081 028 B0
6,0	11,1	+0.070/0	9,10	3,3	3,6	BWS 0060 0111 033 B0
8,0	14,1	+0.070/0	12,10	3,3	3,6	BWS 0080 0141 033 B0
10,0	16,1	+0.070/0	14,10	3,8	4,2	BWS 0100 0161 038 B0
12,0	18,1	+0.084/0	15,10	3,8	4,2	BWS 0120 0181 038 B0
12,0	20,0	+0.084/0	18,00	3,6	4,0	BWS 0120 0200 036 B0
14,0	22,0	+0.084/0	20,00	3,6	4,0	BWS 0140 0220 036 B0
16,0	24,0	+0.084/0	22,00	3,6	4,0	BWS 0160 0240 036 B0

Nota: altre dimensioni non a catalogo a richiesta. Consultare il nostro ufficio tecnico.

Remark: please contact our technical dept. for further dimensions not included in the catalogue.



BWS

RASCHIATORE BIDIREZIONALE CON GRADINO TIPO BWS

Descrizione

Il raschiatore tipo BWS è ottenuto dalla combinazione di una guarnizione a labbri asimmetrici ed un raschiatore.
Presenta sul labbro di tenuta una raggiatura che lo rende molto scorrevole ed ha sul lato statico un gradino ridotto che ne facilita il montaggio soprattutto per diametri piccoli.
La parte raschiante ha un labbro molto sottile per non influenzare il primo distacco nel movimento del cilindro.

Limiti d'impiego

Pressione: < 20 bar
Velocità: < 1 m/s
Temperatura: da - 30° C a + 90° C
Fluidi: aria con o senza lubrificazione, oli e grassi minerali
(vedi tabella 1 a pagina 12)

Materiale

Materiale standard poliuretano a 90 Shore A.
Codice materiale standard: B0
Materiale alternativo poliuretano a 85 Shore A.
Codice materiale alternativo: A0

Montaggio

La sede dove va alloggiato il raschiatore non deve presentare spigoli vivi o bave che compromettano in esercizio la durata dello stesso.

Attenzione: per impieghi gravosi dove sono presenti disallineamenti o fuori centro, con diametri di stelo superiori a ø 16 mm è consigliato un montaggio in sede non più agganciato con il solo gradino ma con tutta la base del raschiatore.

BWS TYPE BI-DIRECTIONAL WIPER WITH STEP

Description

The BWS wiper combines an asymmetric lip seal profile with a wiper.
On the sealing lip the BWS has a radius allowing greater smoothness and on the static side the reduced size step facilitates installation, especially for small diameters.
The scraping part has a very thin lip so as not to influence the stick-slip effect in the cylinder movement.

Technical data

Pressure: *< 20 bar*
Speed: *< 1 m/s*
Temperature: *from - 30° C up to + 90° C*
Fluids: *air with or without lubrication, mineral oils or grease*
(see table 1, page 12)

Material

Standard polyurethane 90 Shore A.
Standard compound reference: B0
Alternative polyurethane 85 Shore A.
Alternative compound reference: A0

Assembling

Remove cutting edges and/or flashes from the housing where the wiper has to be installed in order to minimise seal wear during operation.

Warning: for heavy duty applications showing misalignments or imbalance and with diameters bigger than ø 16 mm, it's recommend to hang the base of the wiper to the housing and not only to the step.

BWS



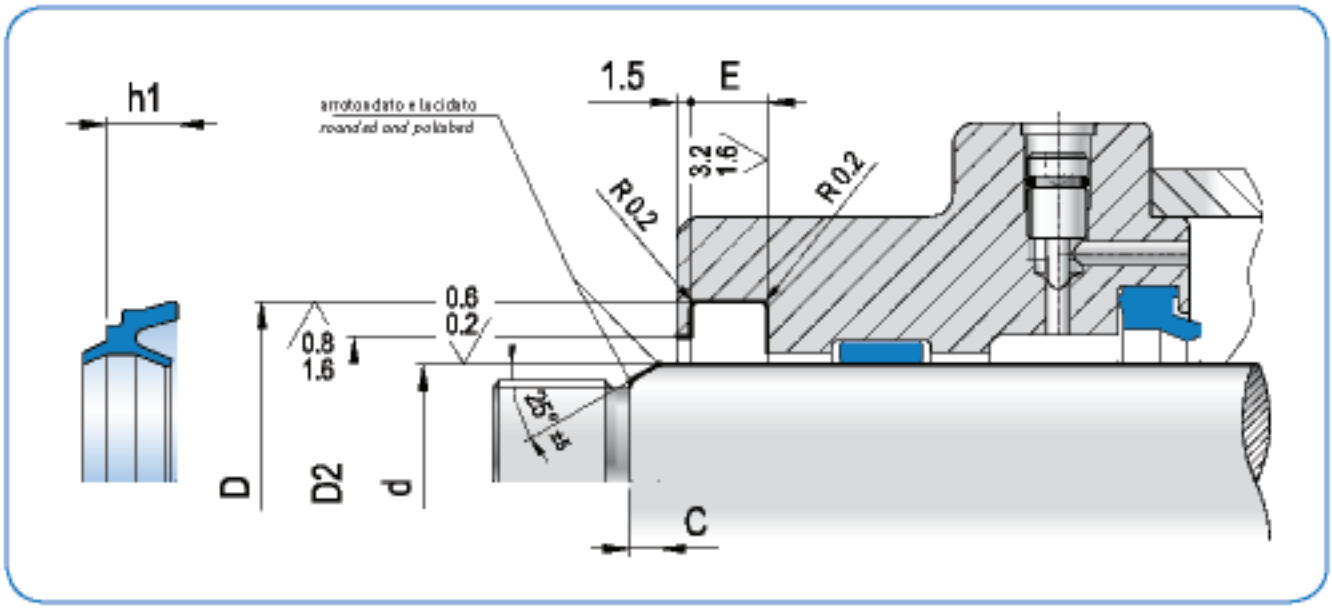

d_{f9}	D_{H10}	Toll $_{H10}$	D_2	h_1	$E_{+0,2}$	ART / ITEM
18	26	+0,084/0	21,5	5,6	6,0	BWS 0180 0260 056 B0
20	28	+0,084/0	23,5	5,6	6,0	BWS 0200 0280 056 B0
22	30	+0,084/0	25,5	5,6	6,0	BWS 0220 0300 056 B0
25	33	+0,100/0	28,5	5,6	6,0	BWS 0250 0330 056 B0
28	36	+0,100/0	31,5	5,6	6,0	BWS 0280 0360 056 B0
30	38	+0,100/0	33,5	5,6	6,0	BWS 0300 0380 056 B0
32	40	+0,100/0	35,5	5,6	6,0	BWS 0320 0400 056 B0
35	43	+0,100/0	38,5	5,6	6,0	BWS 0350 0430 056 B0
36	44	+0,100/0	39,5	5,6	6,0	BWS 0360 0440 056 B0
40	46	+0,100/0	43,0	4,3	4,8	BWS 0400 0460 043 B0
40	48	+0,100/0	43,5	5,6	6,0	BWS 0400 0480 056 B0
42	50	+0,100/0	45,5	5,6	6,0	BWS 0420 0500 056 B0
45	53	+0,120/0	48,5	5,6	6,0	BWS 0450 0530 056 B0
50	58	+0,120/0	53,5	5,6	6,0	BWS 0500 0580 056 B0
55	63	+0.120/0	58,5	5,6	6,0	BWS 0550 0630 056 B0
56	64	+0.120/0	59,5	5,6	6,0	BWS 0560 0640 056 B0
60	68	+0.120/0	63,5	5,6	6,0	BWS 0600 0680 056 B0
100	108	+0.120/0	103,5	5,6	6,0	BWS 1000 1080 056 B0

Nota: altre dimensioni non a catalogo a richiesta. Consultare il nostro ufficio tecnico.

Remark: please contact our technical dept. for further dimensions not included in the catalogue.



BWH

RASCHIATORE BIDIREZIONALE CON GANCIO TIPO BWH

Descrizione

La particolare forma e profilo del raschiatore con aggancio tipo BWH e la sede completamente aperta, ne consentono un rapido montaggio sia in automatico che in manuale.
La sede completamente aperta con una fresatura sulla parte laterale consente di sostituire il raschiatore molto facilmente.
Lo speciale profilo, che combina la tenuta e il raschiatore è molto robusto e consente allo stelo anche significativi disallineamenti senza il pericolo di espulsione dalla sede.
Inoltre, la forma dei labbri statici impedisce alle impurità di penetrare nel cilindro.

Limiti d'impiego

Pressione:	< 20 bar
Velocità:	< 1 m/s
Temperatura:	da - 30° C a + 90° C
Fluidi:	aria con o senza lubrificazione, oli e grassi minerali (vedi tabella 1 a pagina 12)

Materiale

Materiale standard poliuretano a 90 Shore A.
Codice materiale standard: B0
Materiale alternativo poliuretano a 93 Shore A.
Codice materiale alternativo: C0

Montaggio

E' consigliato durante il montaggio lubrificare la parte interna del raschiatore, mentre occorre evitare di lubri-ficare la parte esterna e la cava per il pericolo di espulsio-ne dalla sede.
Eliminare tutti gli spigoli vivi e le bave nella sede per facilitare il montaggio e non danneggiare la guarnizione durante l'inserimento.

BWH TYPE BI-DIRECTIONAL WIPER WITH HOOK

Description

The main characteristic of the hooked profile of the BWH wiper is to enable easy and fast installation into a complete open housing, both automatically and manually.
The groove is completely open with a lateral milling which allows the wiper to be replaced easily.
The special profile combining seal and wiper is very strong and allows important rod misalignments without any danger of ejection from the seat.
Moreover, the static lips profile keeps the cylinder free from outside impurities.

Technical data

Pressure:	*< 20 bar*
Speed:	*< 1 m/s*
Temperature:	*from - 30° C up to + 90° C*
Fluids:	*air with or without lubrication, mineral oils or grease (see table 1, page 12)*

Material

Standard polyurethane 90 Shore A.
Standard compound reference: B0
Alternative polyurethane 93 Shore A.
Alternative compound reference: C0

Assembling

The wiper should be lubricated internally during installation. The external lubrication of the wiper and housing is not recommended due to the extrusion risk of the wiper. It is important to remove cutting edges and flashes in the housing to prevent damages of seal during assembling.



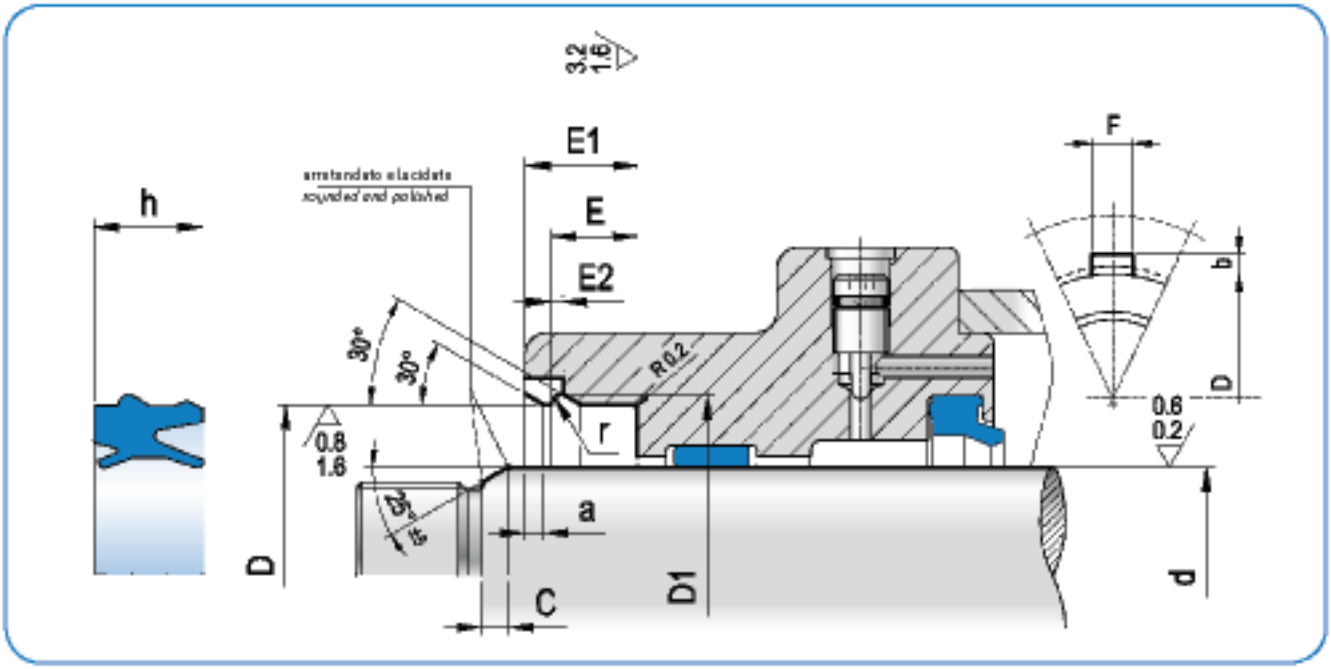

RSP
SRS
SRSN
CSA
PSP
PSPN
MPS
SPS
SPSN
MPP
ISA
ESA
NG
LWA
BWA
BWAN
BWS
BWH
BWHN

d_{f9}	D_{H10}	toll $_{H10}$	D_1	h	E_1	E	E_2	r	a	b	F	ART / *ITEM*
12,0	20,0	+0,084/0	22,0	10,7	13,0	8,8	2,5	1,1	1,5	1,8	4,0	BWH 0120 0200 107 B0
12,0	22,0	+0,084/0	24,0	10,7	13,0	8,8	2,5	1,1	1,5	1,8	4,0	BWH 0120 0220 107 B0
16,0	26,0	+0,084/0	28,0	10,7	13,0	8,8	2,5	1,1	1,5	1,8	5,0	BWH 0160 0260 107 B0
18,0	26,0	+0,084/0	28,0	10,7	13,0	8,8	2,5	1,1	1,5	1,8	5,0	BWH 0180 0260 107 B0
18,0	28,0	+0,084/0	30,0	10,7	13,0	8,8	2,5	1,1	1,5	1,8	5,0	BWH 0180 0280 107 B0
20,0	30,0	+0,084/0	32,0	10,7	13,0	8,8	2,5	1,1	1,5	1,8	5,0	BWH 0200 0300 107 B0
22,0	32,0	+0,100/0	34,5	11,2	14,0	9,4	3,0	1,4	2,0	2,0	7,5	BWH 0220 0320 112 B0
25,0	35,0	+0,100/0	37,5	11,2	14,0	9,4	3,0	1,4	2,0	2,0	7,5	BWH 0250 0350 112 B0
30,0	40,0	+0,100/0	42,5	11,2	14,0	9,4	3,0	1,4	2,0	2,0	7,5	BWH 0300 0400 112 B0
32,0	42,0	+0,100/0	44,5	11,2	14,0	9,4	3,0	1,4	2,0	2,0	7,5	BWH 0320 0420 112 B0
40,0	50,0	+0,100/0	52,5	11,2	14,0	9,4	3,0	1,4	2,0	2,0	7,5	BWH 0400 0500 112 B0
45,0	55,0	+0,120/0	58,2	12,2	15,0	10,4	4,0	1,8	2,0	2,5	10,0	BWH 0450 0550 122 B0
50,0	60,0	+0,120/0	63,2	12,2	15,0	10,4	4,0	1,8	2,0	2,5	10,0	BWH 0500 0600 122 B0
63,0	75,0	+0,120/0	78,2	13,0	16,0	11,4	4,0	1,8	2,0	2,5	10,0	BWH 0630 0750 130 B0

Nota: altre dimensioni non a catalogo a richiesta. Consultare il nostro ufficio tecnico.

Remark: please contact our technical dept. for further dimensions not included in the catalogue.



BWH/N

RASCHIATORE BIDIREZIONALE CON GANCIO TIPO BWH/N

Descrizione

La particolare geometria del raschiatore BWH/N , senza aggancio con anima metallica vulcanizzata all'interno , per sede completamente aperta, favorisce il montaggio in automatico.
Il basso rilievo creato in sede, porta SEEGER , garantisce la non espulsione del raschiatore .
Anche la sostituzione in caso di manutenzione e' estremamente semplice.
Lo speciale profilo , che combina la tenuta e il raschiatore in un unica soluzione , impedisce alle impurita' di penetrare nel cilindro.

Limiti d'impiego

Pressione: < 16 [bar]
Velocità: < 1 [m/s]
Temperatura: da - 30°C a +100°C per la versione in NBR
da -15°C a + 150°C per la versione in FKM
Fluidi: aria lubrificata,grassi e oli minerali (vedi tabella 1 a pagina 12)

Materiale

Il materiale standard è NBR 75 Shore A colore nero
In alternativa FKM 75 Shore a di colore marrone.
Codice materiale standard: NG

Montaggio

Le sequenze del montaggio sono le seguenti :
1) Inserimento raschiatore
2) Posizionamento SEEGER nell'apposita nicchia
E' consigliato lubrificare la sede e togliere gli spigoli vivi creati da lavorazione meccanica.

BWH/N TYPE BI-DIRECTIONAL WIPER WITH HOOK

Description

The special geometry of the wiper BWH / N, without hanging, with vulcanized metal core inside, for completely open groove, improve the assembling.
The grooved seat circlip holder, avoids the scraper ejection.
The replacement is also very simple during maintenance.
The special profile combining seal and wiper in a single solution, keeps the cylinder free from outside impurities.

Technical data

Pressure: < 16 [bar]
Speed: < 1 [m/s]]
Temperature: from – 30°C to +100°C for NBR version
from -15°C to +150°C for FKM version
Fluids: lubricated air, grease and mineral oils (see table 1, page 12)

Material

Standard material is NBR 75 Shore A black colour.
In alternative FKM 75 Shore A brown colour.
Compound reference: NG

Assembling

We suggest assembling as follows:
1) Insert scraper
2) Place circlip in the niche
Is recommended to lubricate the seat and remove the sharp edges originated by the machining.

BWH/N



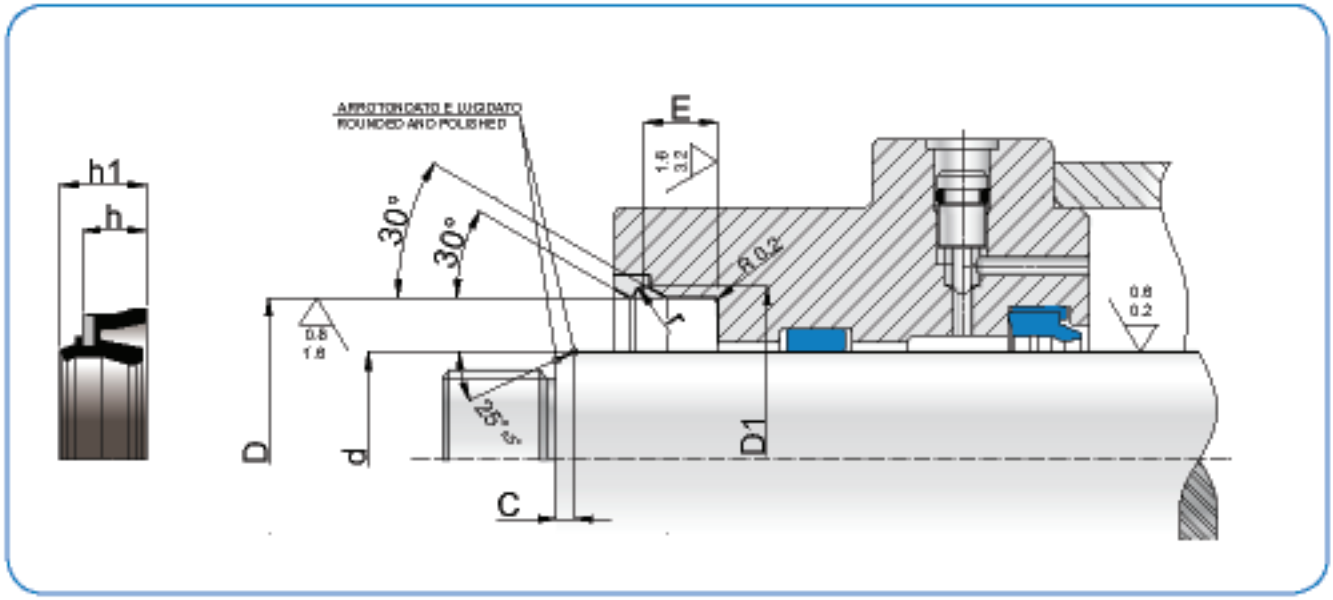

df9	DH10	h	h1	D1	E	r	ART / ITEM
10,0	20,0	7,0	9,5	22,00	8,50	1,10	BWH 0100 0200 070 NG
12,0	20,0	6,0	8,5	22,00	7,50	1,10	BWH 0120 0200 060 NG
12,0	22,0	7,0	9,5	24,00	8,50	1,10	BWH 0120 0220 070 NG
14,0	24,0	7,0	9,5	26,00	8,50	1,10	BWH 0140 0240 070 NG
16,0	26,0	7,0	9,5	28,00	8,50	1,10	BWH 0160 0260 070 NG
18,0	26,0	6,0	8,5	28,00	7,50	1,10	BWH 0180 0260 060 NG
18,0	28,0	7,0	9,5	30,00	8,50	1,10	BWH 0180 0280 070 NG
20,0	30,0	7,0	9,5	32,00	8,50	1,10	BWH 0200 0300 070 NG
22,0	32,0	7,0	9,5	34,50	8,80	1,40	BWH 0220 0320 070 NG
25,0	35,0	7,0	9,5	37,50	8,80	1,40	BWH 0250 0350 070 NG
30,0	40,0	7,0	9,5	42,50	8,80	1,40	BWH 0300 0400 070 NG
32,0	42,0	7,0	9,5	44,50	8,80	1,40	BWH 0320 0420 070 NG
40,0	50,0	7,0	9,5	52,50	8,80	1,40	BWH 0400 0500 070 NG
50,0	60,0	7,0	9,0	62,50	8,30	1,40	BWH 0500 0600 065 NG


RPEMI S.L.U
SUMINISTROS INDUSTRIALES

ORPEMI S.L.U
SUMINISTROS INDUSTRIALES



